DVD Receiver

MRD200/37/37S

LX2000D/21H/30S

Service
Service
Service

Service Manual

For repair information on the Subwoofer please refer to Service Manual of Active Subwoofer SW200
12NC: 3139 785 30093

TABLE OF CONTENTS

	Page
Location of PC Boards	1-2
Versions Variation & Package	1-2
Specifications	1-3
Measurement Setup	1-4
Service Aids	1-5
ESD & Safety Instruction	1-6
Setting Procedure & Repair Instructions	2
Disassembly Instructions & Service positions	3
Block & Wiring Diagram	4
Key/ Volume/ LED/ Earphone Board	5
Tuner Board	6
DVD Module KIT572SE	7
DVD Module KIT772SI	7A
Main Board /Speaker Jack Board	8
MPEG Board	9
RGB Board	10
Surround Board	11
Power Board	12
Mechanical Exploded View & Parts List	13
History	14

CLASS 1
LASER PRODUCT

© Copyright 2002 Philips Consumer Electronics B.V. Eindhoven, The Netherlands
All rights reserved. No part of this publication may be reproduced, stored in a retrieval system or transmitted, in any form or by any means, electronic, mechanical, photocopying, or otherwise without the prior permission of Philips.

Published by KC-ET0232 Service Audio Printed in The Netherlands Subject to modification

GB 3139 785 30092

Version 1.2

PHILIPS

LOCATION OF PC BOARDS

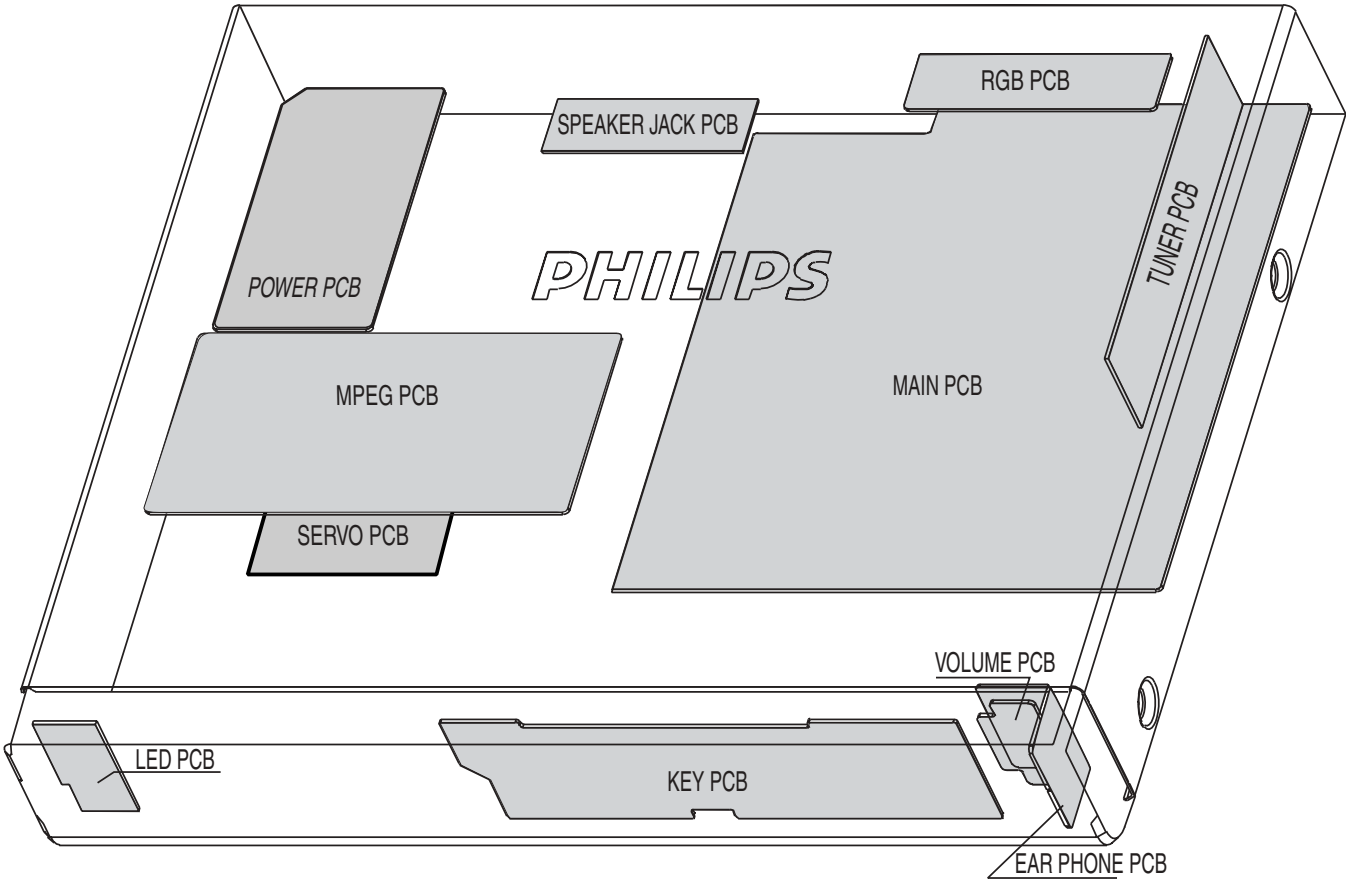

VERSION VARIATION:

Type /Versions: / Features & Board in used	MRD200		LX2000D			
	/37	/37S	/21H	/30S	/33S	/35S
RDS function						
Progressive scan						
RGB board	x	x	x	x	x	x
Power PCB (120V)	x	x				
Power PCB (220-240V)			x	x	x	x

Type /Versions:	MRD200		LX2000D			
	/37	/37S	/21H	/30S	/33S	/35S
SW200 / 17	x					
SW200 / 17S		x				
SW2000 / 00S				x	x	
SW2000 / 02S			x			
SW2000 / 15S						x

SPECIFICATIONS

AMPLIFIER SECTION

Power Output
- Stereo mode (DIN).....2 x 20 W
- Surround mode (1 kHz).....20 W RMS/channel

Total Harmonic Distortion.....10 % at rated power (1 kHz)
Frequency Response .....180 Hz-14 kHz/±1 dB
Signal-to-Noise Ratio.....> 65dB(CCIR)
Input Sensitivity.....400 mV

TUNER SECTION

Tuning Range (/37,/37S)
..... FM 87.5 -108 MHz (100 kHz steps)
.....AM 530 - 1700 kHz (10 kHz steps)

Tuning Range (/21H, /30S, /33S, /35S)
..... FM 87.5 -108 MHz (50 kHz steps)
.....MW531 - 1602kHz (9 kHz steps)

26 dB Quieting Sensitivity.....FM 20 dB
26 dB Quieting Sensitivity.....AM 3162 uV/m
Image Rejection Ratio.....FM 25 dB
.....AM 28 dB
IF Rejection Ratio.....FM 60 dB
.....AM 24 dB
Signal-to-Noise Ratio.....FM 60 dB
.....AM 40 dB
AM Suppression Ratio.....FM 30 dB
Harmonic Distortion.....FM Mono 3%
.....FM Stereo 3%
.....AM 5%
Frequency Response.....FM 180 Hz-10kHz/±6 dB
Stereo Separation.....FM 26 dB(1 kHz)
Stereo threshold.....FM 23.5 dB

DVD SECTION

Audio Performance :

Laser Type.....Semiconductor
Disc Diameter.....12cm/8cm
Video S/N ratio.....65 dB/A - WTD
Audio DAC.....24 Bits/96 kHz
Frequency Response.....4 Hz-20 kHz (44.1kHz)
..... 4 Hz-22 kHz (48 kHz)
..... 4 Hz-44 kHz (96 kHz)
Digital Output.....SPDIF Coaxial & Optical
Distortion.....0.5% (1kHz)

MP3 :

MP3 - CD bit rate.....32, 64, 96, 128, 192, 256(kbps)
MP3 - CD sampling frequencies.....32, 44.1, 48(KHz)
Recording format.....JPEG

Video Performances :

Video Decoding.....MPEG-2
Video DAC.....10 Bits
Signal System.....PAL/NTSC
Video Format.....4:3/16:9
Composite Video Output.....1.0Vp-p,75Ω
S-Video Output.....Y - 1.0Vp-p,75Ω
.....C - 0.286Vp-p,75Ω

MISCELLANEOUS / GENERAL SECTION

Power Supply Rating (/37,/37S).....120V/60 Hz
Power Supply Rating (/21H,/30S,/33S,/35S)..220-240V/50Hz
Power Consumption..... 120 W
Dimensions (w x h x d)..... 435 mm x 78 mm x 360mm
Weight.....7.1 kg

IR REMOTE CONTROL

Effective Range.....> 8 Meter
Number of Keys.....45
Battery (1.5V).....AA x 2

SPEAKERS

Front Speakers / Rear (Surround) speaker

System.....2-way shielded
Impedance/ ohm.....8Ω
Speaker drivers.....3" full range
Dimensions (w x h x d)..... 94 mm x 155 mm x 88 mm
Weight..... 0.45 Kg/each

Center Speaker

System.....2-way shielded
Impedance/ ohm.....8Ω
Speaker drivers.....2 x 3" woofer, piezo
Dimensions (w x h x d).....250mm x 95 mm x 88 mm
Weight..... 0.92 Kg/each

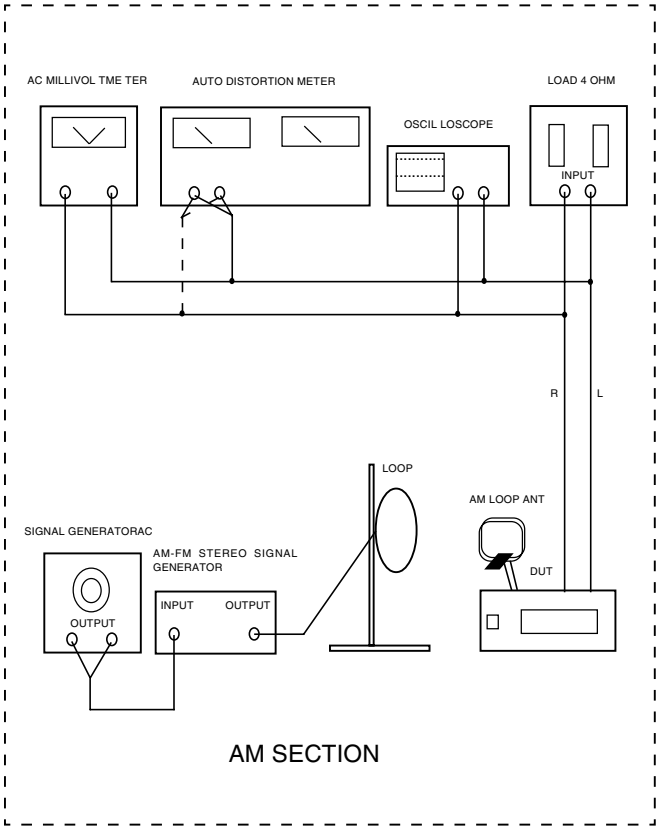

AM SECTION

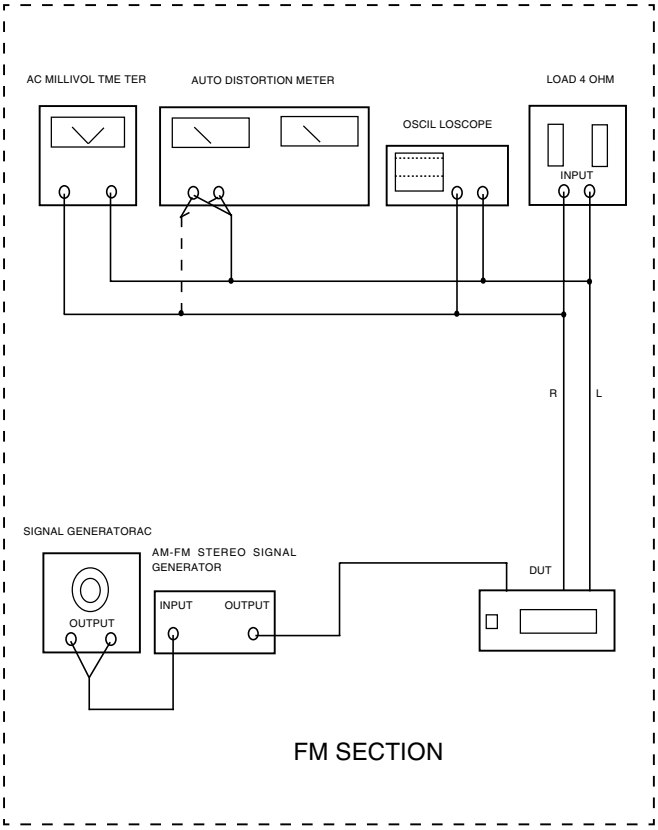

FM SECTION

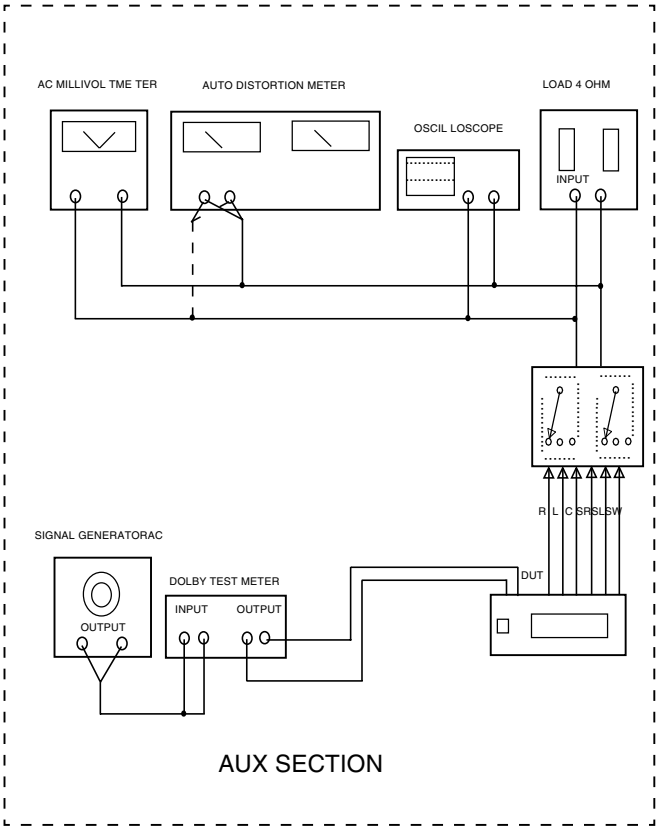

AUX SECTION

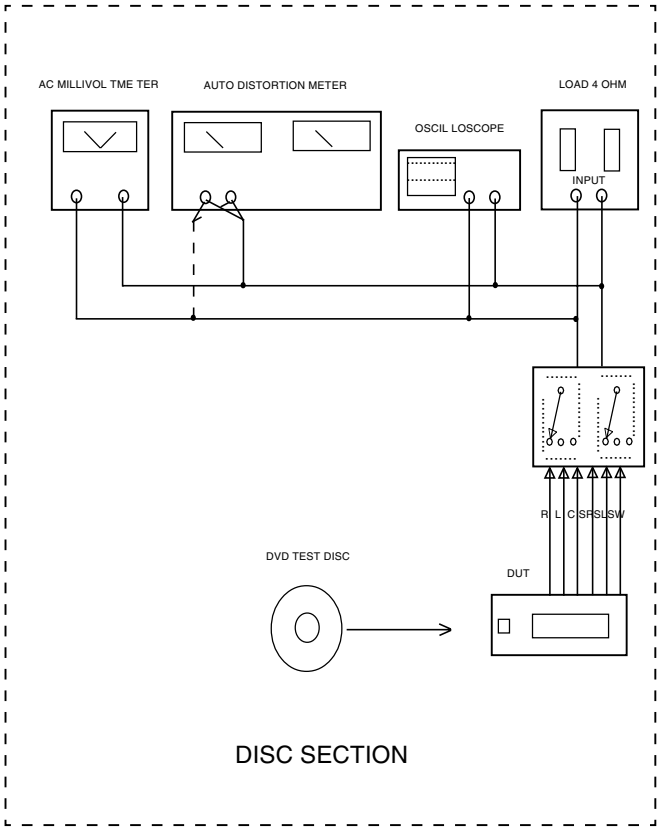

DISC SECTION

SERVICE AIDS

Service Tools:

Universal Torx driver holder 4822 395 91019
Torx bit T10 150mm 4822 395 50456
Torx driver set T6-T20 .....4822 395 50145
Torx driver T10 extended 4822 395 50423

Compact Disc:

SBC426/426A Test disc 5 + 5A 4822 397 30096
SBC442 Audio Burn-in test disc 1kHz 4822 397 30155
SBC429 Audio Signals disc 4822 397 30184
Dolby Pro-logic Test Disc 4822 395 10216

ESD Equipment:

Anti-static table mat - large 1200x650x1.25mm ...4822 466 10953
anti-static table mat - small 600x650x1.25mm 4822 466 10958
Anti-static wristband 4822 395 10223
Connectorbox (1MΩ) 4822 395 11307
Extension cable
(to connect wristband to conn.box) 4822 320 11305
Connecting cable
(to connect table mat to conn.box) 4822 320 11306
Earth cable (to Connect product to mat or box) --4822 320 11308
Complete kit ESD3
(combining all above products) 4822 320 10671
Wristband tester 4822 344 13999

HANDLING CHIP COMPONENTS

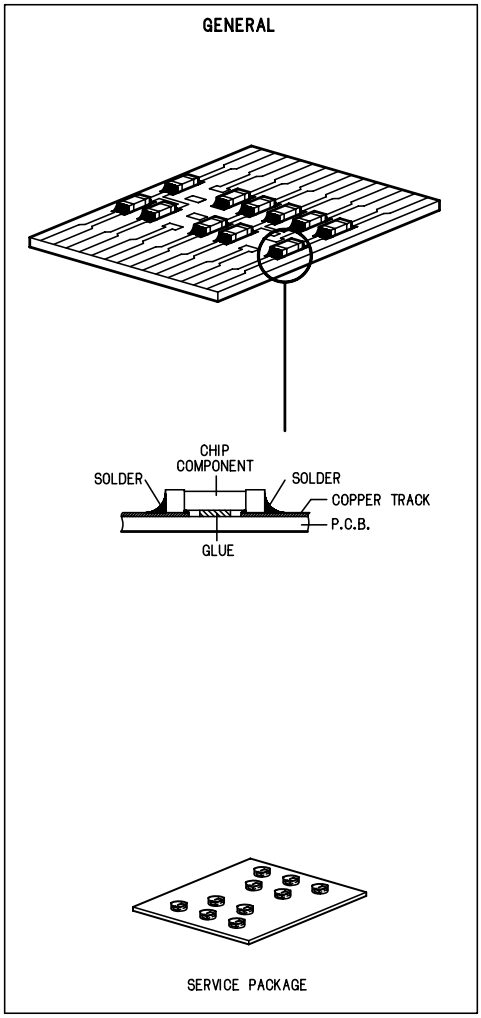

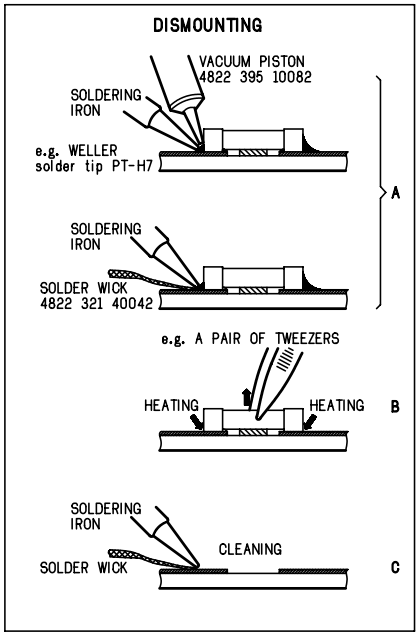

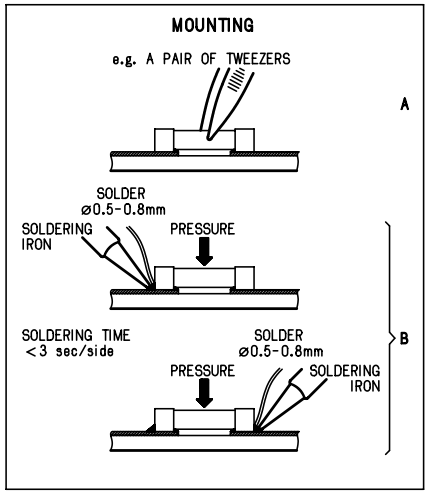

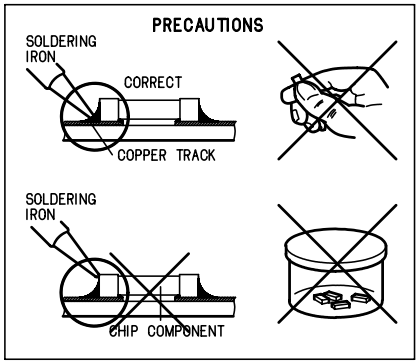

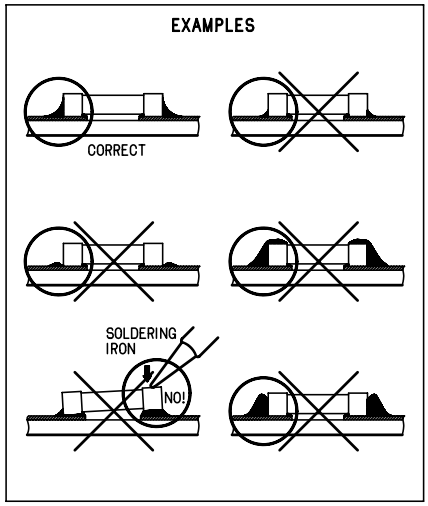

ESD

GB WARNING

All ICs and many other semi-conductors are susceptible to electrostatic discharges (ESD). Careless handling during repair can reduce life drastically.
When repairing, make sure that you are connected with the same potential as the mass of the set via a wrist wrap with resistance.
Keep components and tools also at this potential.

NL WAARSCHUWING

Alle IC's en vele andere halfgeleiders zijn gevoelig voor electrostatische ontladingen (ESD).
Onzorgvuldig behandelen tijdens reparatie kan de levensduur drastisch doen verminderen.
Zorg ervoor dat u tijdens reparatie via een polsband met weerstand verbonden bent met hetzelfde potentiaal als de massa van het apparaat.
Houd componenten en hulpmiddelen ook op ditzelfde potentiaal.

F ATTENTION

Tous les IC et beaucoup d'autres semi-conducteurs sont sensibles aux décharges statiques (ESD).
Leur longévité pourrait être considérablement écourtée par le fait qu'aucune précaution n'est prise à leur manipulation.
Lors de réparations, s'assurer de bien être relié au même potentiel que la masse de l'appareil et enfiler le bracelet serti d'une résistance de sécurité.
Veiller à ce que les composants ainsi que les outils que l'on utilise soient également à ce potentiel.

D WARNUNG

Alle ICs und viele andere Halbleiter sind empfindlich gegenüber elektrostatischen Entladungen (ESD).
Unsorgfältige Behandlung im Reparaturfall kan die Lebensdauer drastisch reduzieren.
Veranlassen Sie, dass Sie im Reparaturfall über ein Pulsarmband mit Widerstand verbunden sind mit dem gleichen Potential wie die Masse des Gerätes.
Bauteile und Hilfsmittel auch auf dieses gleiche Potential halten.

I AVVERTIMENTO

Tutti IC e parecchi semi-conduttori sono sensibili alle scariche statiche (ESD).
La loro longevità potrebbe essere fortemente ridatta in caso di non osservazione della più grande cauzione alla loro manipolazione.
Durante le riparazioni occorre quindi essere collegato allo stesso potenziale che quello della massa dell'apparecchio tramite un braccialetto a resistenza.
Assicurarsi che i componenti e anche gli utensili con quali si lavora siano anche a questo potenziale.

GB

Safety regulations require that the set be restored to its original condition and that parts which are identical with those specified, be used.

NL

Veiligheidsbepalingen vereisen, dat het apparaat bij reparatie in zijn oorspronkelijke toestand wordt teruggebracht en dat onderdelen, identiek aan de gespecificeerde, worden toegepast.

F

Les normes de sécurité exigent que l'appareil soit remis à l'état d'origine et que soient utiliséés les piéces de rechange identiques à celles spécifiées.

D

Bei jeder Reparatur sind die geltenden Sicherheitsvorschriften zu beachten. Der Original zustand des Geräts darf nicht verändert werden; für Reparaturen sind Original-Ersatzteile zu verwenden.

I

Le norme di sicurezza esigono che l'apparecchio venga rimesso nelle condizioni originali e che siano utilizzati i pezzi di ricambio identici a quelli specificati.

"After servicing and before returning set to customer perform a leakage current measurement test from all exposed metal parts to earth ground to assure no shock hazard exist. The leakage current must not exceed 0.5mA."

"Pour votre sécurité, ces documents doivent être utilisés par des spécialistes agréés, seuls habilités à réparer votre appareil en panne".

GB Warning !

Invisible laser radiation when open.
Avoid direct exposure to beam.

S Varning !

Osynlig laserstrålning när apparaten är öppnad och spärren är urkopplad. Betrakta ej strålen.

SF Varoitus !

Avatussa laitteessa ja suojalukituksen ohitettaessa olet alttiina näkymättömälle laserisäteilylle. Älä katso säteeseen!

DK Advarse !

Usynlig laserstråling ved åbning når sikkerhedsafbrydere er ude af funktion. Undgå udsaettelse for stråling.

System, Region code, Tuner, etc. setting procedure

1) System Reset

a) Press "SYSTEM" button on R/C. TV show "SETUP"
b) Select the menu using the "▼" and "►" button on R/C
c) Go feature setup page to do system reset

2) Region Code Change

After replacement / repair of the MPEG board, the customer setting and the reegion code may lost. Changing the Region Code will put the player back in the state which it has left the factory.

Region Code

1	USA
2	EU
3	AP
4	Australia, NZ, Latam
5	RUSSIA, INDIA
6	CHINA

TV System

1	NTSC
2	PAL
3	AUTO

Menu/ Audio Subtitle (AS) Language

1	English
2	English
3	English
4	English

AFS

001	LX2000D/LX3000D/LX3500D/ MRD200
002	MX3550D/MX3600D/MX3700D/MX3800D

oem derivative

08

- region code = 1 digit
- tv system = 1 digit
- "as/menu lang" = 1 digit
- "AFS" = "architechture Feature Set" = 3 digits

This field is used to define the architecture / features sets for each product.

- "oem derivative" = 2 digit

This field is use to define the OEM set. This will affect the background display.

Hence in total, reprograming will be done by way of the remote control. It should run as below :-

a) Put the player in stop mode. No disc loaded.
b) Press the following key on remote control:

For MRD200/37/37S (USA) :
<PLAY> <159> <111> <001> <08> <PLAY>

For LX2000D/21H (AP) :
<PLAY> <159> <331> <001> <08> <PLAY>

For LX2000D/30S (NZ, Australia) :
<PLAY> <159> <431> <001> <08> <PLAY>

For LX2000D/33S (Korea) :
<PLAY> <159> <311> <001> <08> <PLAY>

For LX2000D/35S (China) :
<PLAY> <159> <631> <001> <08> <PLAY>

* After the Region Code is changed it is necessary to reset the system so that the new Region Code will be fully effective. All customer setting will be lost.

* On top of the maximum number of times allowed for changing the region code is changed to 25.

* When the counter reeach 25, you will not be able to further change the code until you reset the timer by the Region Code timer reset procedure.

CAUTION !

This information is confidencial and may not be distributed. Only a qualified service person should reprogram the Region Code.

3) Region code change timer reset

Press below key to reset the timer :
a) In DISC source, stop mode and no disc in tray.
b) Press R/C "Play -159-PLAY" to reset timer to 25

4) Tuner area change

a) Press the "OPEN/CLOSE" button to openthe set's door
b) Press "1" "5" "9" button by using R/C.
c) TV Show "TUNER AREA ADJUST"
d) Select the tuner area you want by using the "▼" and "►" button on R/C, then press "OK" to confirm. TV show " TUNER AREA CHANGED"
If you didn't press it in five seconds, the system will remain original status.

AREA	BAND	FREQUENCY (Hz)		STEP(Hz)
USA	FM	87.5M	108M	100K
	AM	530K	1700K	10K
APAC	FM	87.5M	108M	50K
	AM	531K	1602K	9K
EUROPE	FM	87.5M	108M	50K
	AM	531K	1602K	9K
LATAM	FM	87.5M	108M	50K
	AM	530K	1710K	10K
AUSTRALIA / NZ	FM	87.5M	108M	50K
	AM	531K	1602K	9K

Note :-
Please refer to the above different tuner area.

5. Video Out Change

a) Press "SYSTEM" on R/C button
b) Select the menu using the "▼" and "►" button on R/C
c) Go picture setup page select Video out item.

6. Password Change

a) Press "SYSTEM" on R/C button.
b) Select the menu using the "▼" and "►" button on R/C.
c) Go feature setup page select "PASSWORD". TV show "ENTER CODE". Press 4 times of "STOP" button on R/C.
d) Select "PARENTAL" "8 ADULT" on TV.
e) Enter PASSWORD to "1234".
* "1234" is a default password supplied.

7. Checking on the Software version

a) Open the CD door.
b) Press "123" and "OK" on the remote control.
c) TV will show the version on screen.

8. Upgrading new software

a) Open the CD-door, then insert the CD-R program disc.
b) Close the CD-door.
c) TV will show:-
- "disc loading"
- "bank30.rom"
- "writing" about 6 seconds.
- "Done"

* The latest upgraded is in version VER0527.

2-2

REPAIR INSTRUCTIONS

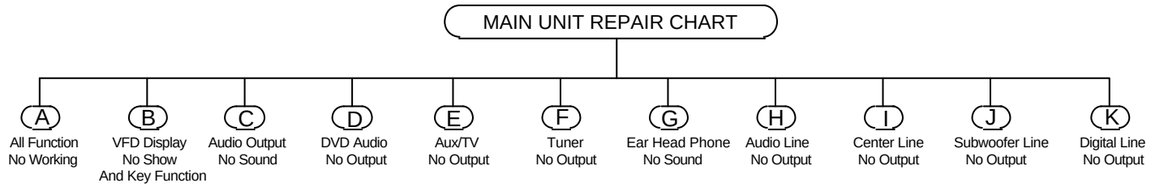

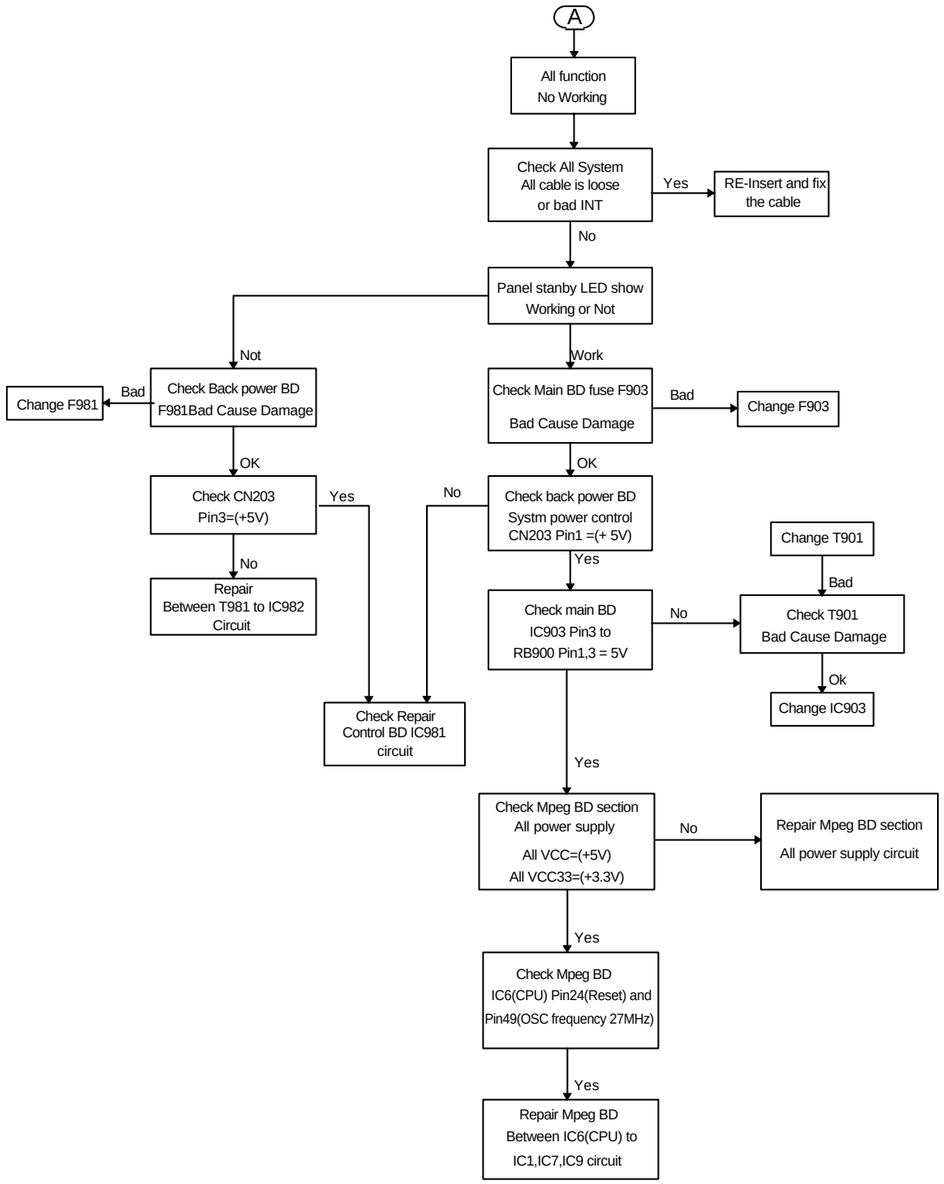

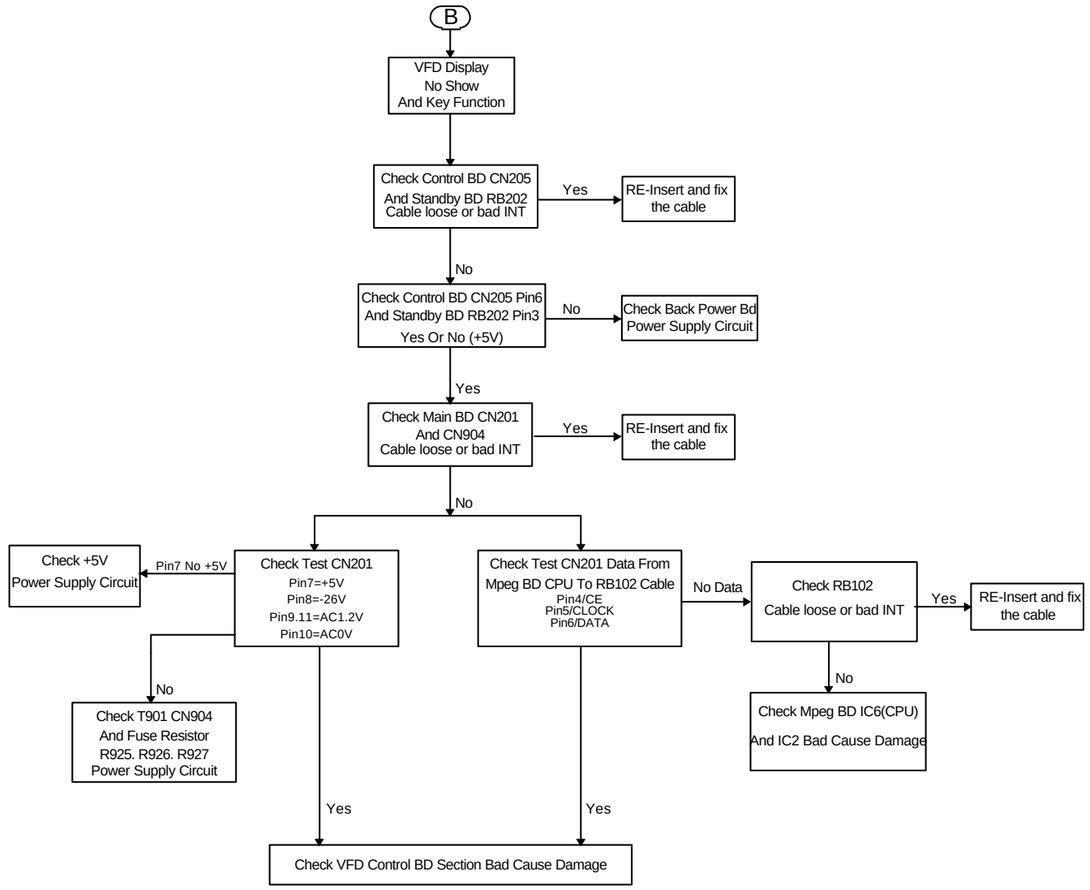

Note: BD=Board

Main BD = LVM0189C011

MPEG BD = LFF0205C001

Surround BD = LVA0192C001

Tuner BD = LVT0187C001

2-3

REPAIR INSTRUCTIONS

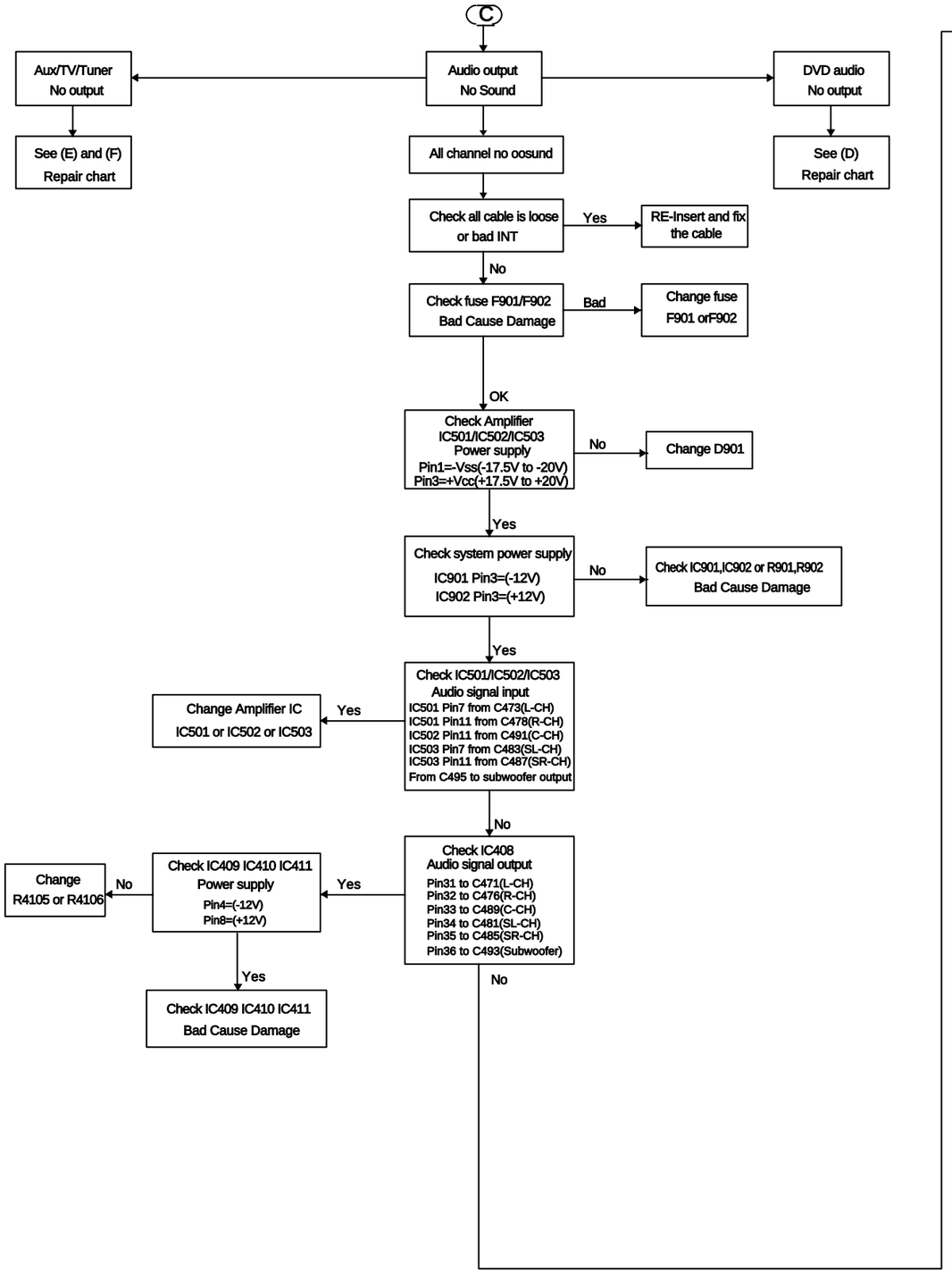

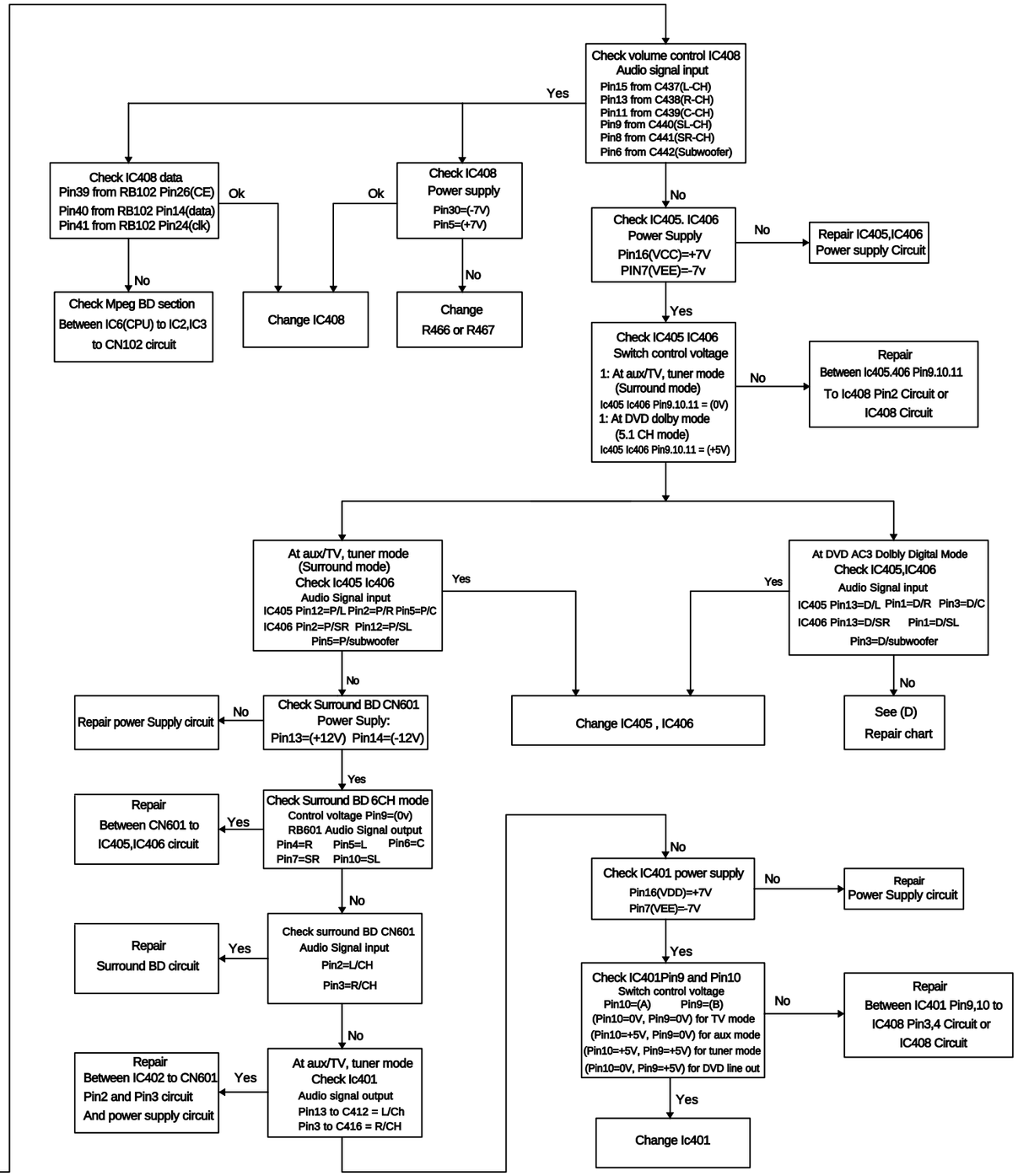

2-4

REPAIR INSTRUCTIONS

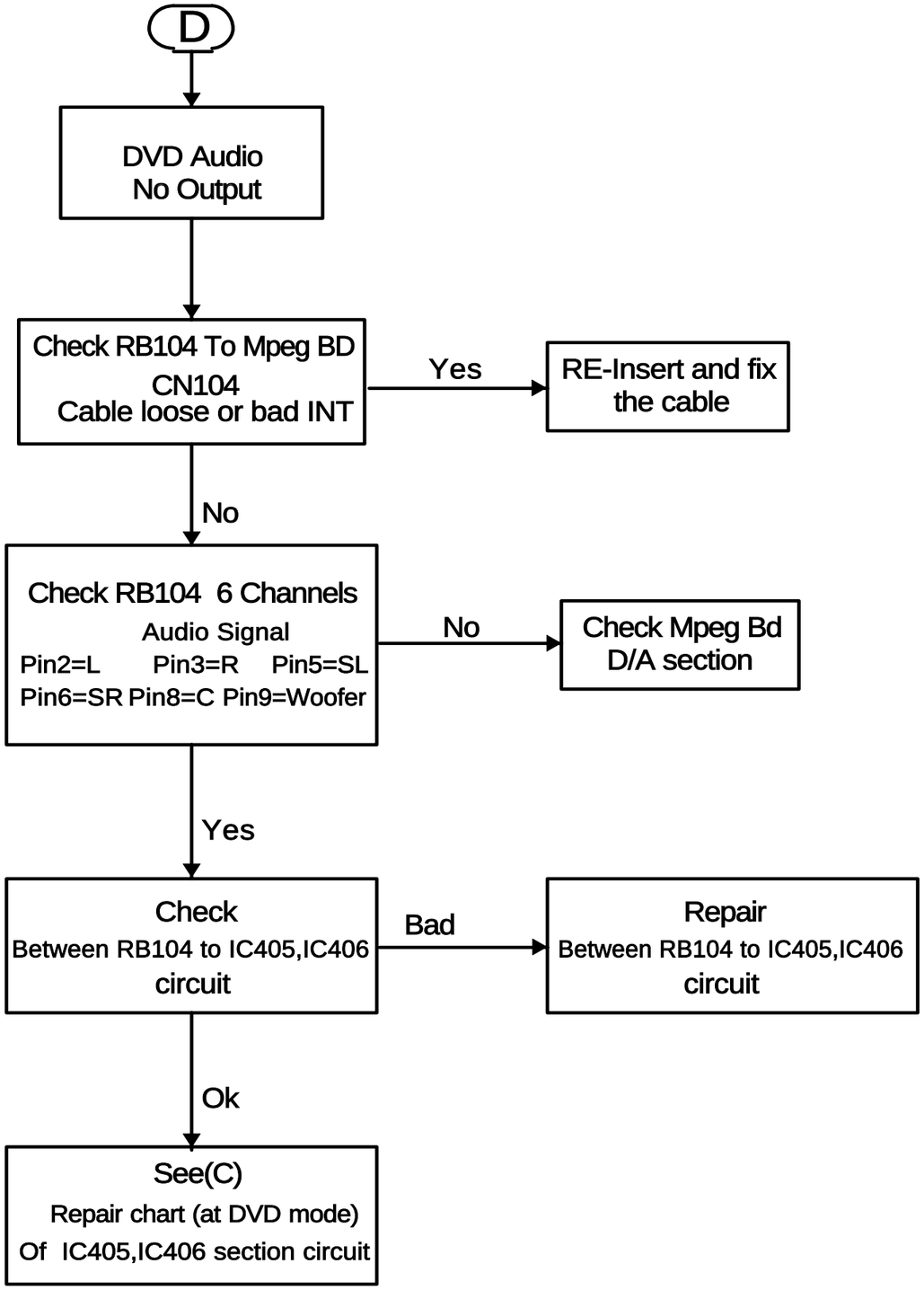

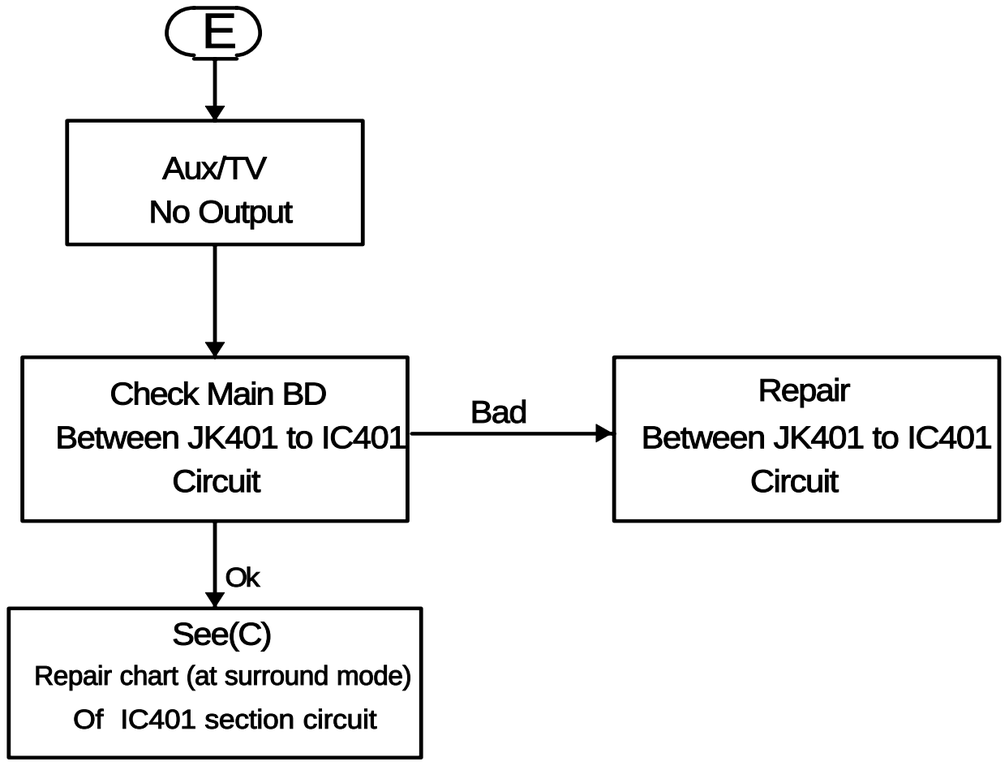

2-5

REPAIR INSTRUCTIONS

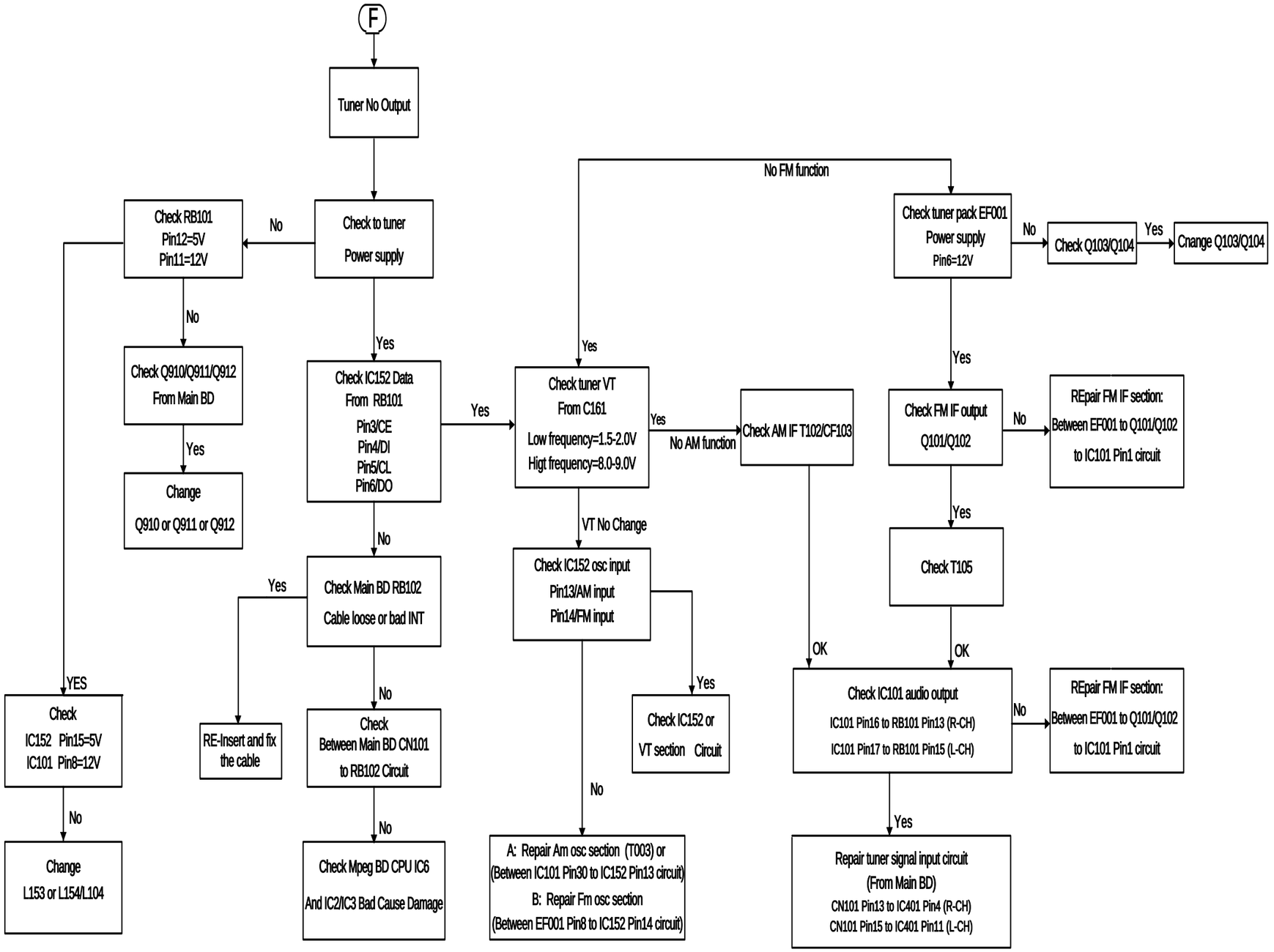

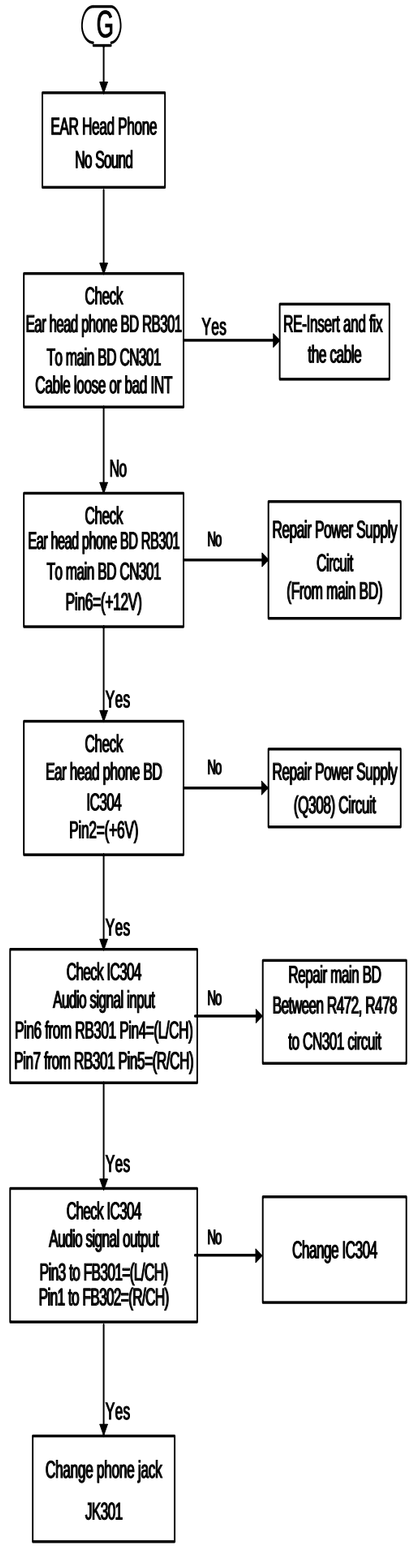

2-6

REPAIR INSTRUCTIONS

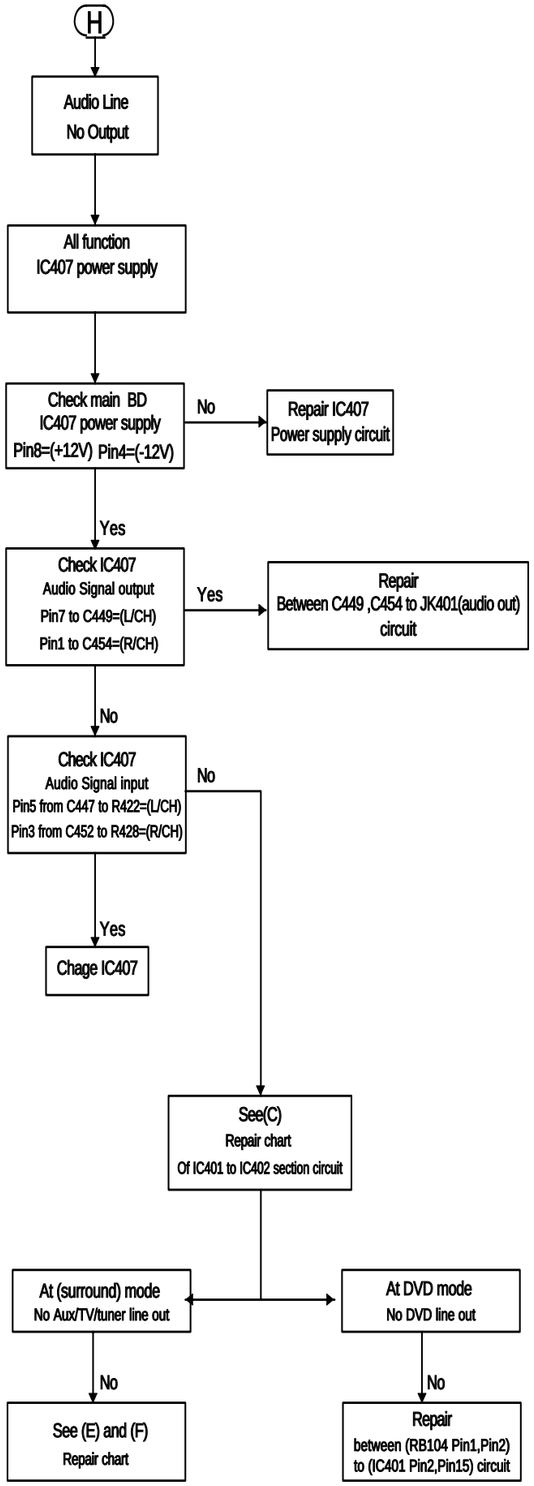

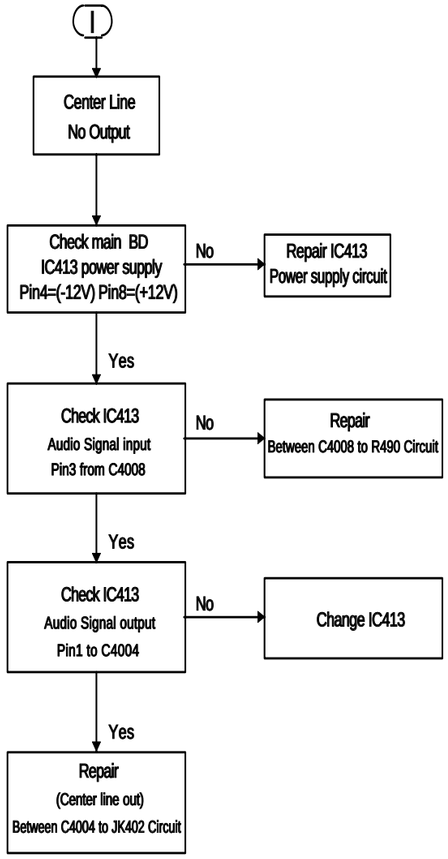

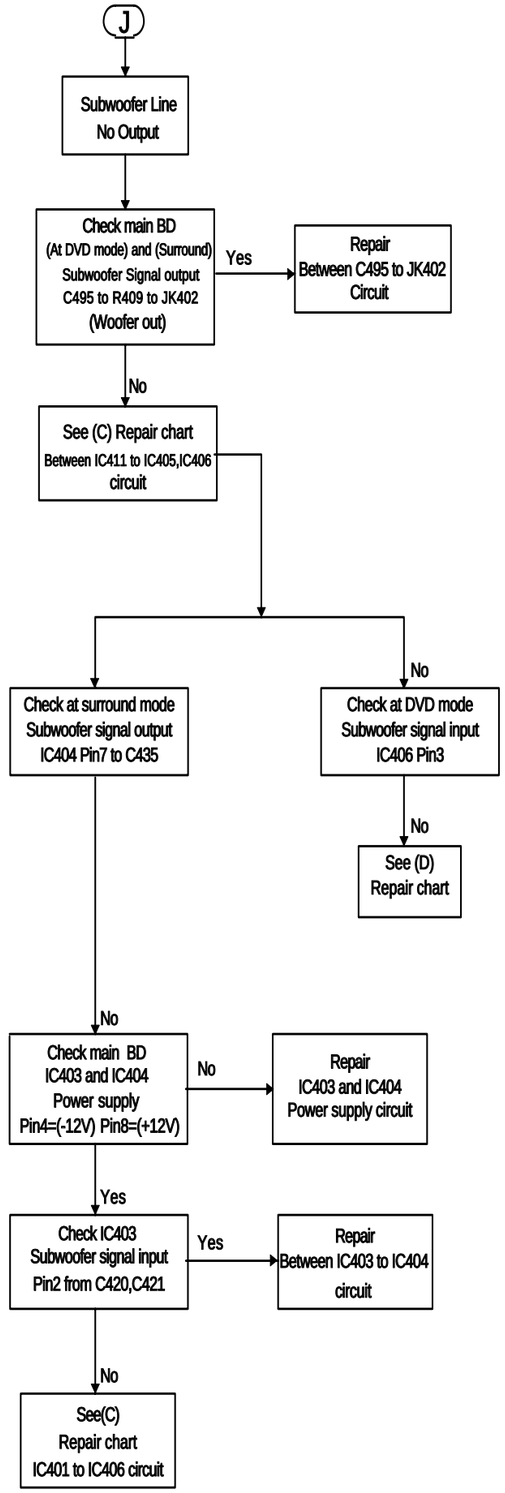

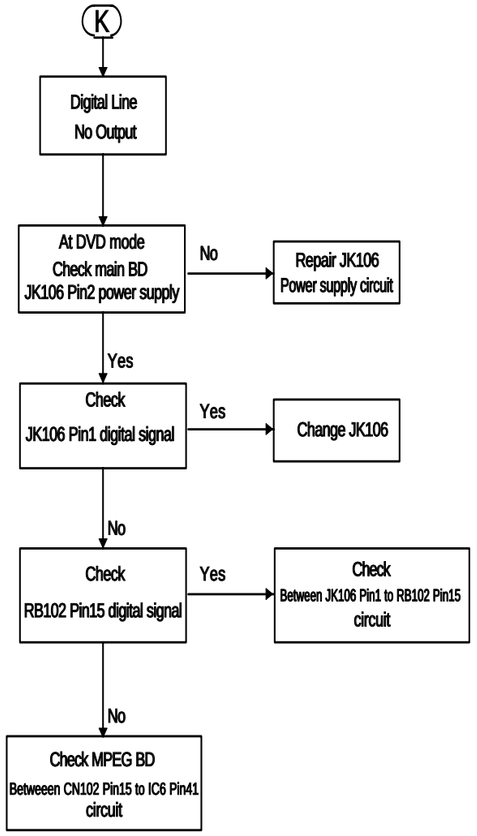

2-7

REPAIR INSTRUCTIONS

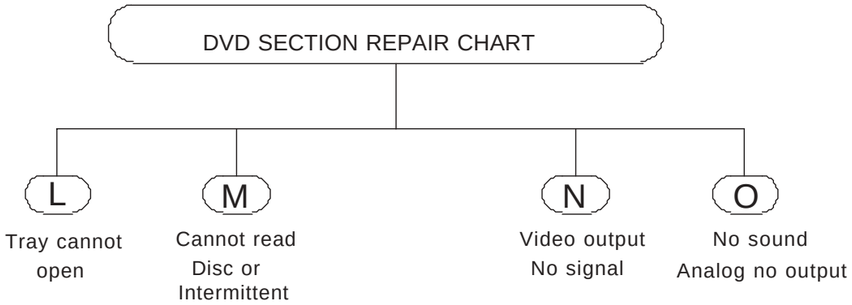

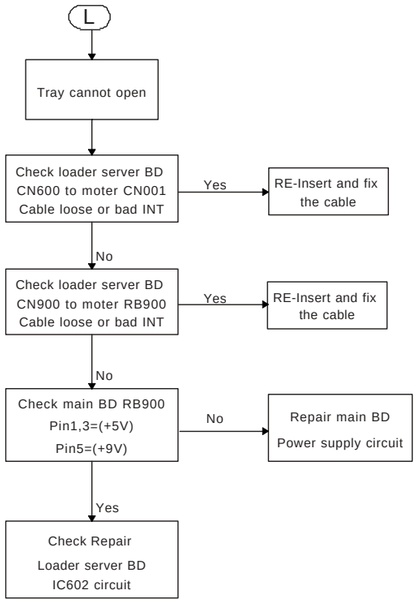

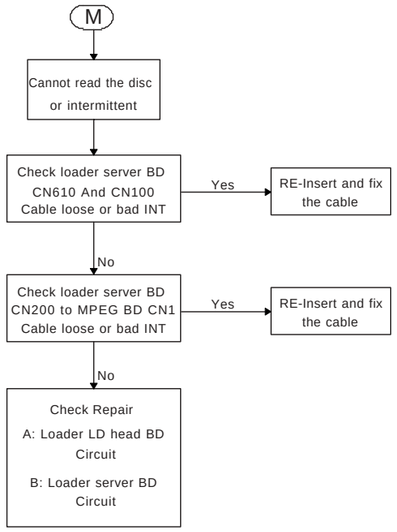

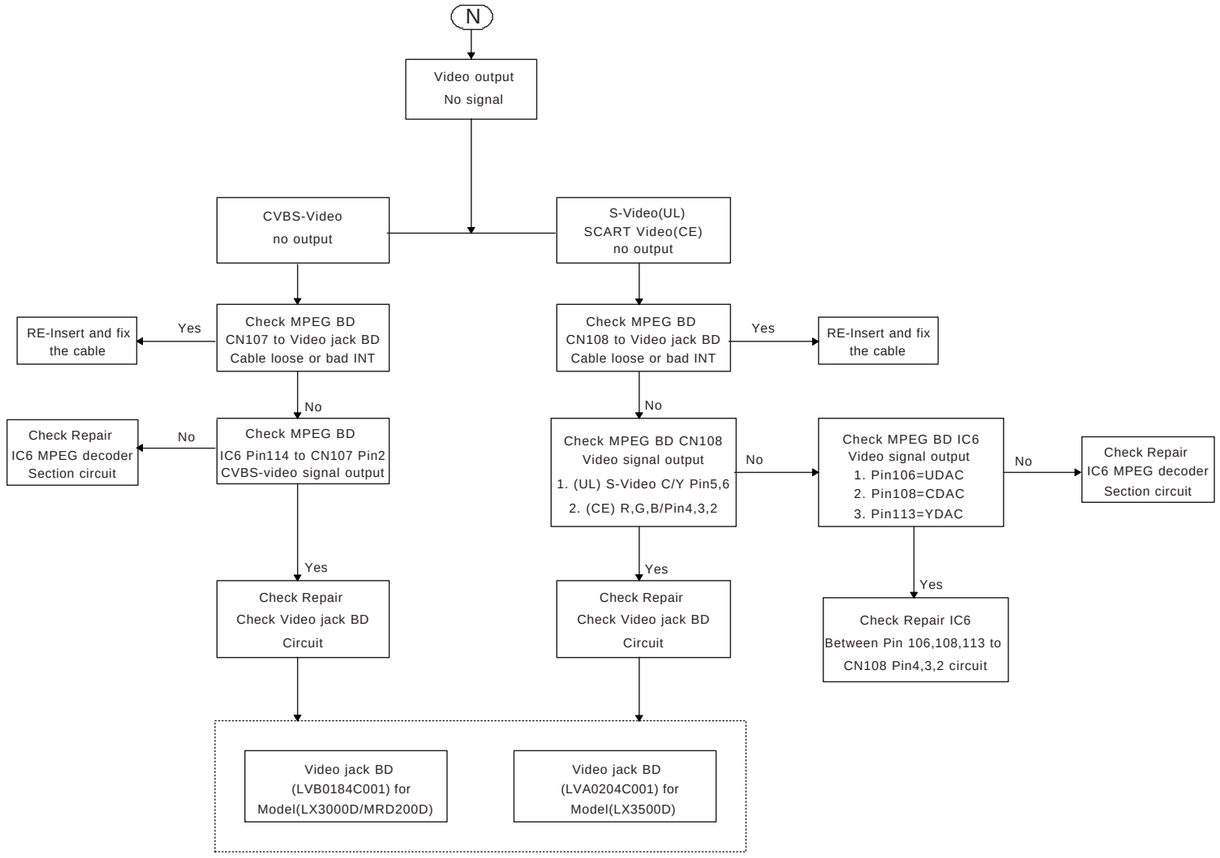

Note: BD=Board

MPEG BD = LFF0205C001

Video jack board(LX3000D/MRD200D)=LVB0184C001

Video jack board(LX3500D)=LVA0204C001

2-8

REPAIR INSTRUCTIONS

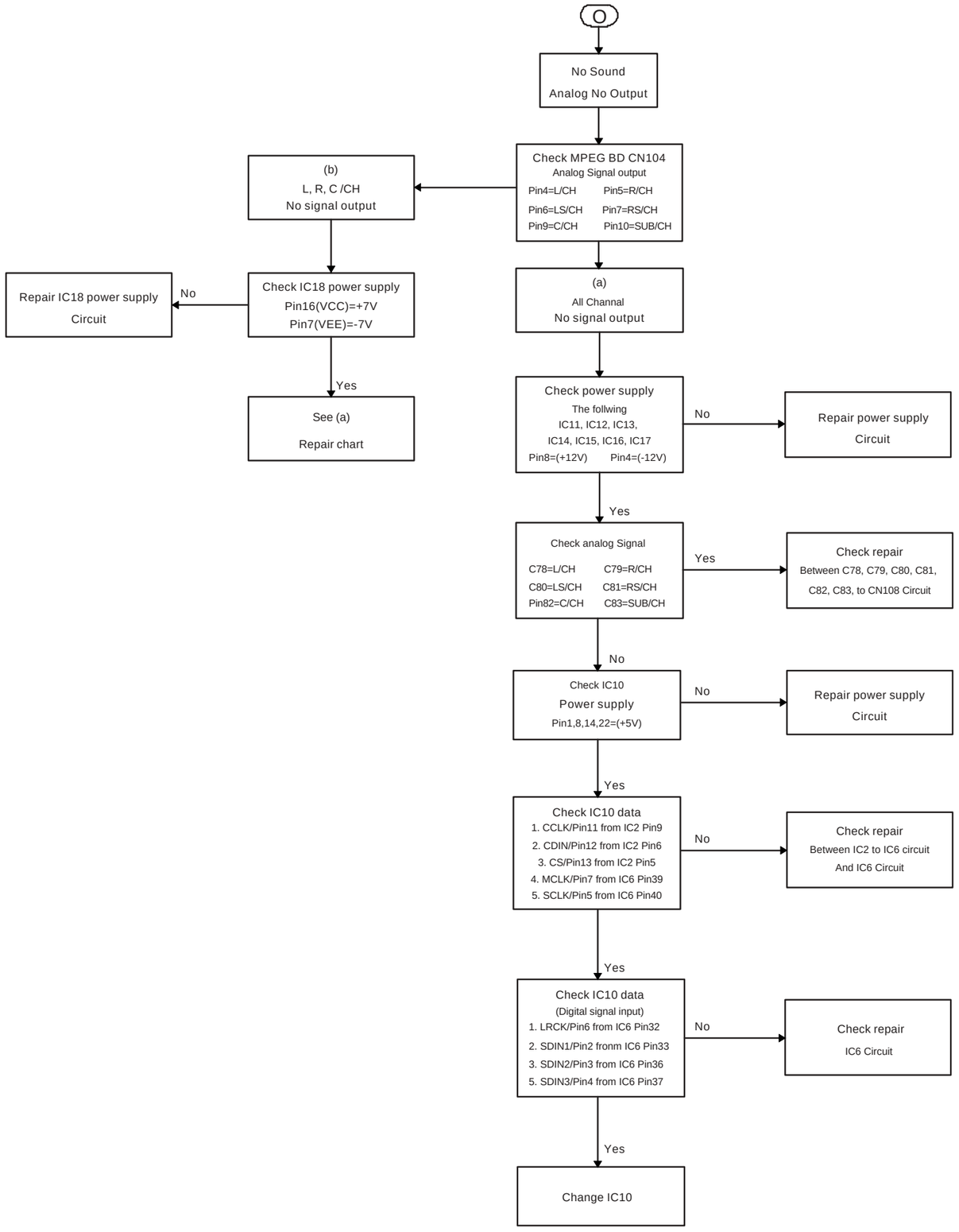

DISASSEMBLY INSTRUCTIONS

Dismantling of the KeyBoard Assembly

1) Open the DVD Tray by using the Open/Close Button while the Set is ON and disconnect the mains supply after removing the Tray Cover.

   Note: If this is not possible, the DVD Tray has to be open manually.

   Take a mini screw driver about 2mm diameter and make a marking 24mm from the tip as shown in figure 2. Place the set on its side, insert the mini screw driver till the marking and slide it towards the right as shown in figure 1 until the Tray moves out of the Front Panel.

2) Return the set to its upright position and remove the Tray Cover as shown in Figure 3 and close the tray manually by pushing it back in.

3) Loosen 11 screws and remove the Top Cover by lifting the rear portion upwards before sliding it out towards the rear.
   - 7 screws on the back
   - 2 screws each on the left & right side

4) Loosen 7 screws & lift up the top edge of Front Panel assembly to free some catches (see figure 3) before sliding it out towards the front.
   - 5 screws on the bottom
   - 1 screw each on the left & right side

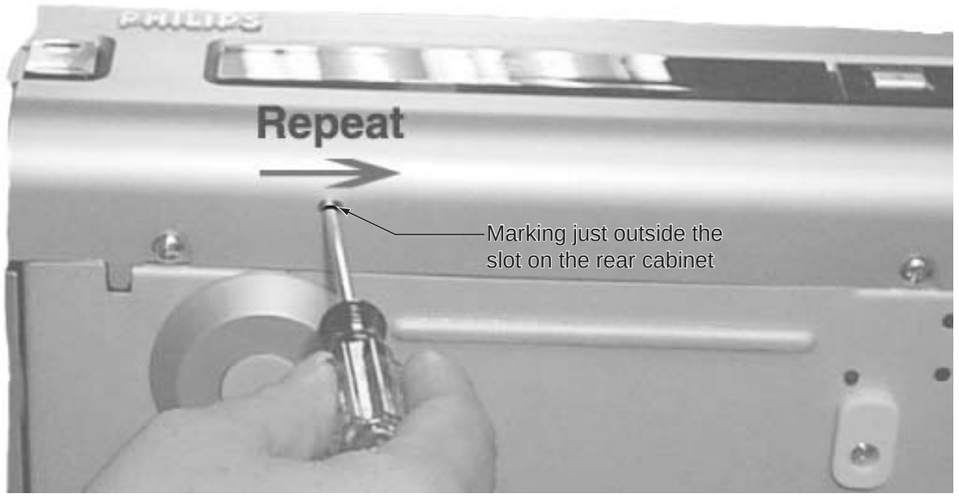

Figure 1

Figure 2

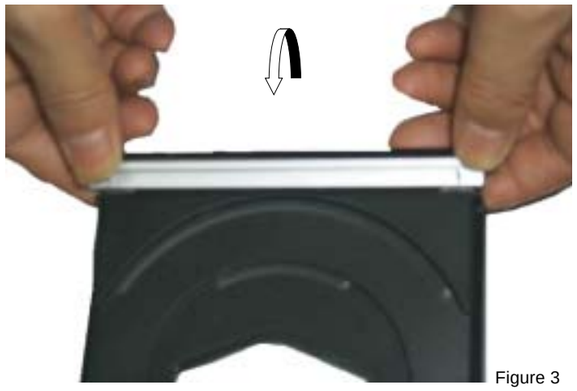

Figure 3

Dismantling of the MPEG Board

1) Loosen 4 screws A to remove the metal cover together with MPEG board and remove the connector as shown in figure 4.

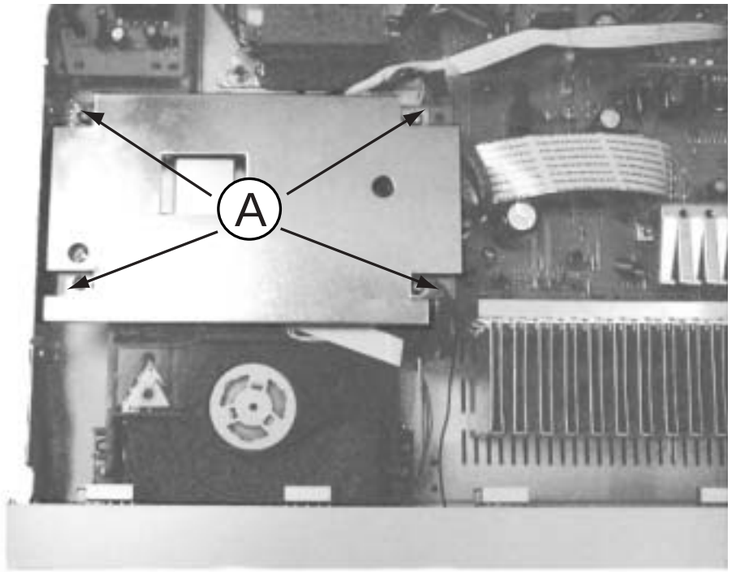

Note: Do not lost the limited between the MPEG board and the servo board

Figure 4

Dismantling of the DVD Module

1) Loosen 4 screws B to remove the DVD module as shown in figure 5 .

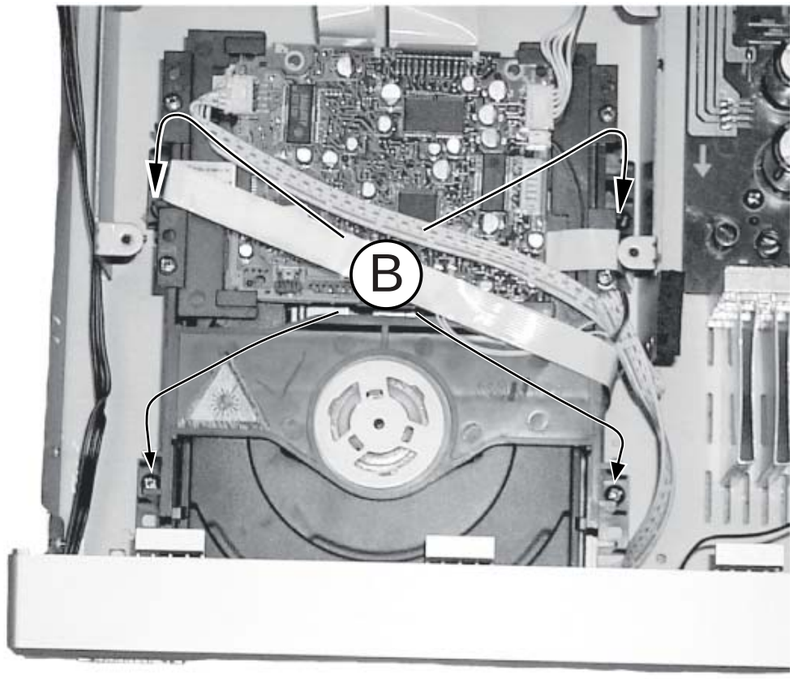

Figure5

Dismantling of the Main Board (include Tuner & Surround Board)

1) Loosen 6 screws F on the top of main board as shown in figure 7.

2) Loosen 10 screws C at the back panel as shown in figure 8.

3) Loosen 3 screws D on the bottom cover as shown in figure 9.

4) Remove all connectors on tuner, surround, RGB & main board.

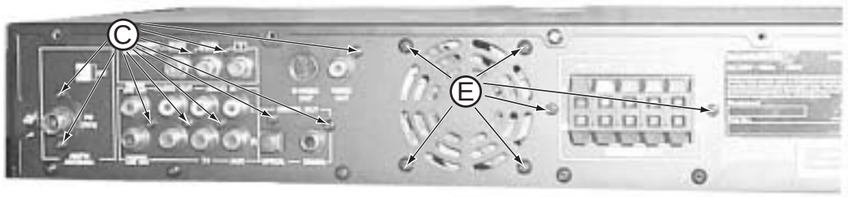

Figure 8

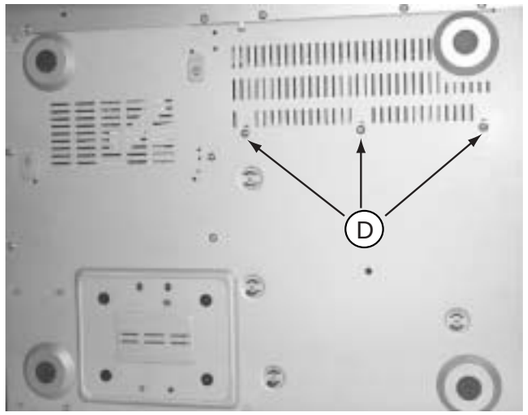

Figure 9

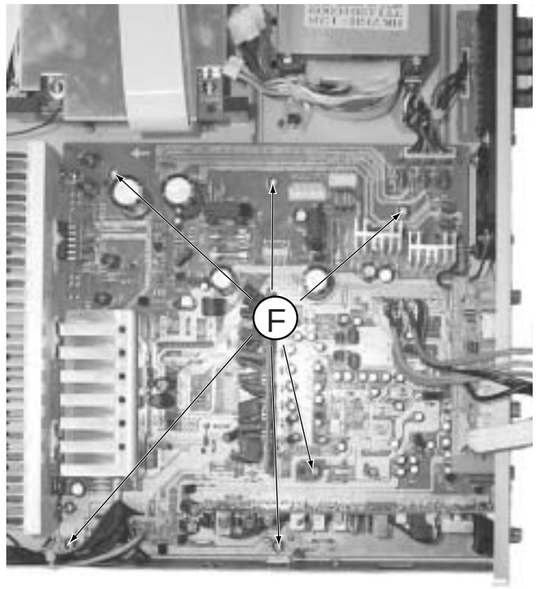

Figure 7

Dismantling of the Speaker Jack Board & Fan

1) Loosen 6 screws E at the back panel as shown in figure 8.

2) Remove all connectors at speaker jack and Fan.

SERVICE POSITIONS

Service position A

Service position B

Note: In some service positions the components or copper patterns of one board may risk touching its neighbouring pc boards or metallic parts. To prevent such short-circuit use a piece of hard paper or other insulating material between them.

Service position C

4-1

BLOCK DIAGRAM

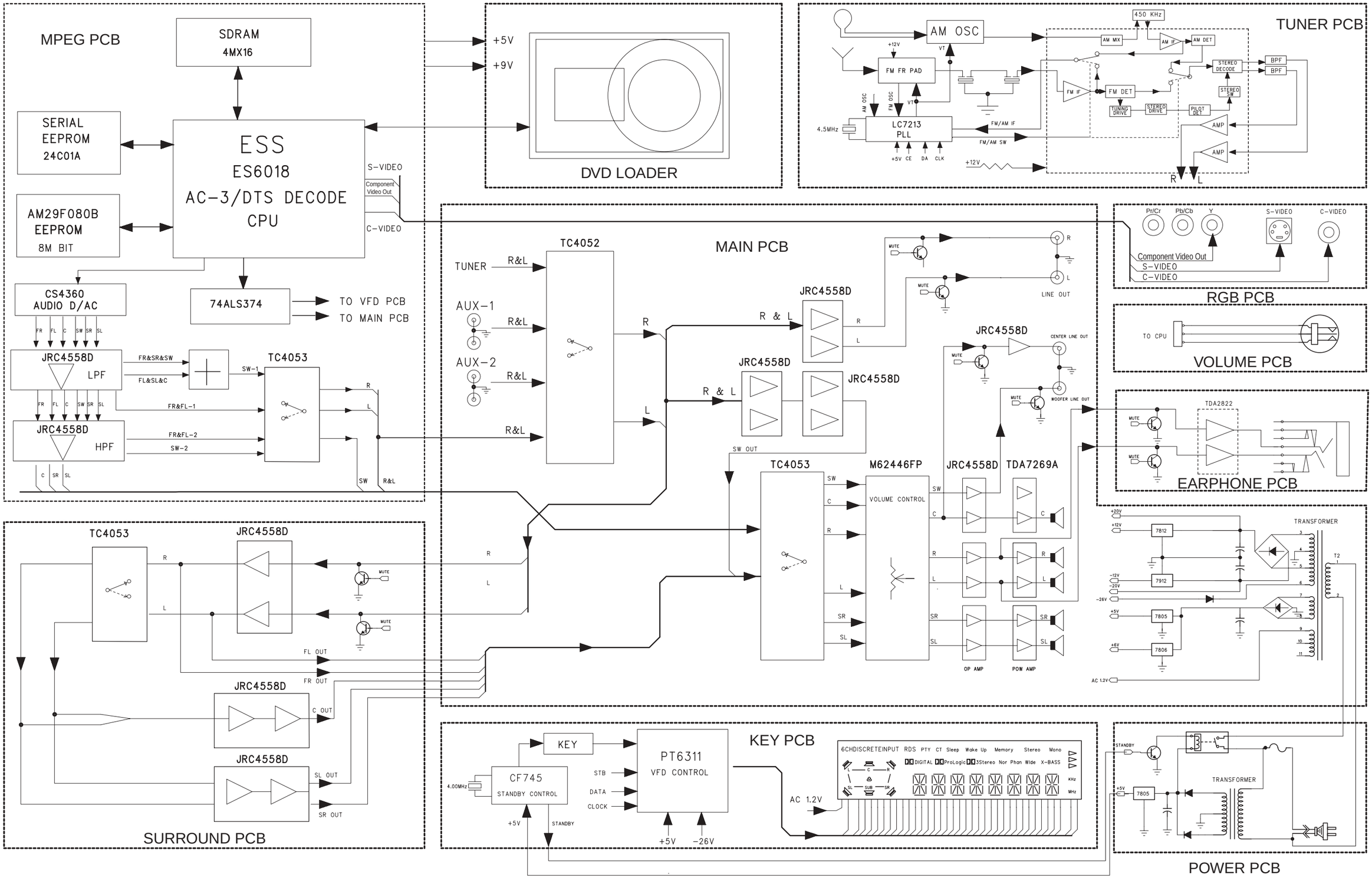

4-2

WIRING DIAGRAM

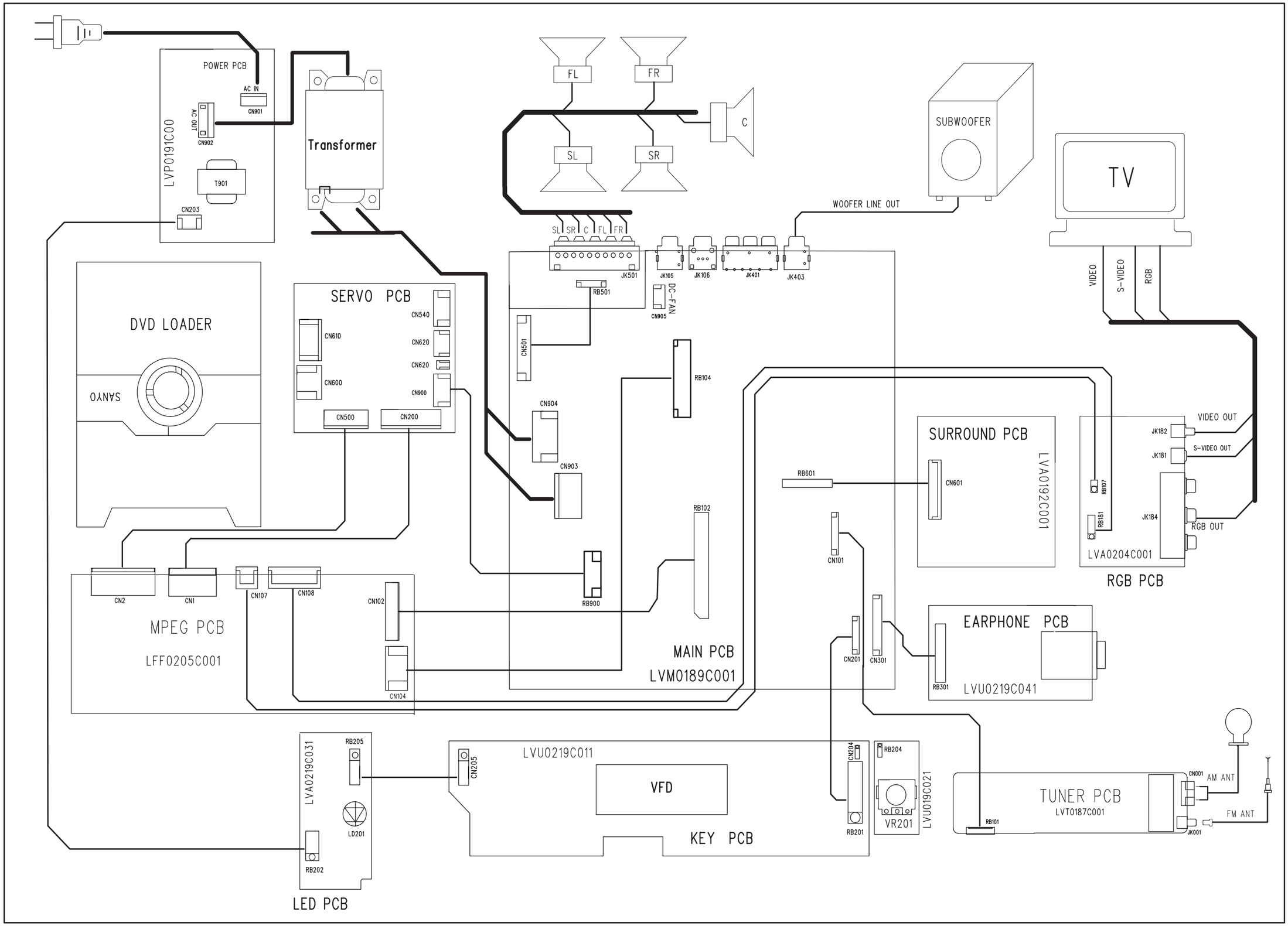

KEY / VOLUME / LED / EARPHONE BOARD

TABLE OF CONTENTS

FTD Display Pin Assignment 5-1
Pin Connection 5-1
Circuit Diagram 5-2
PCB Layout Top View 5-3
PCB Layout Bottom View 5-3
Electrical Parts List 5-4

FTD DISPLAY PIN ASSIGNMENT

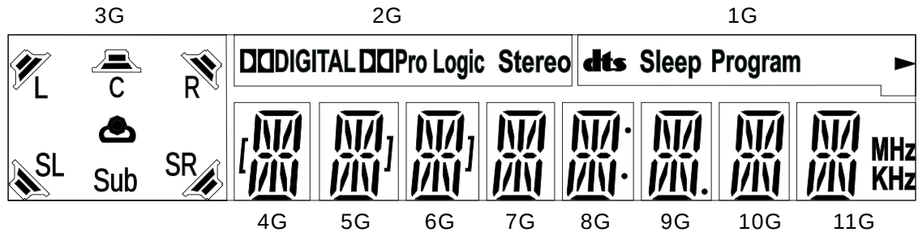

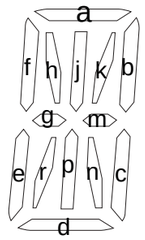

(4G-11G)

	1G	2G	3G	4G	5G	6G	7G	8G	9G	10G	11G
P1	Program	DIGITAL	R	a	a	a	a	a	a	a	a
P2	Sleep	ProLogic	C	b	b	b	b	b	b	b	b
P3	dts	Stereo	L	h	h	h	h	h	h	h	h
P4				j	j	j	j	j	j	j	j
P5			SL	k	k	k	k	k	k	k	k
P6			Sub	f	f	f	f	f	f	f	f
P7			SR	g	g	g	g	g	g	g	g
P8				m	m	m	m	m	m	m	m
P9	►			e	e	e	e	e	e	e	e
P10				r	r	r	r	r	r	r	r
P11				p	p	p	p	p	p	p	p
P12				n	n	n	n	n	n	n	n
P13				c	c	c	c	c	c	c	c
P14				d	d	d	d	d	d	d	d
P15				[	]	]		Col	Dp		MHz
P16											KHz

PIN CONNECTION

PIN NO.	1	2	3	4	5	6	7	8	9	10	11	12	13	14	15	16	17	18	19	20	21	22	23	24	25	26	27	28	29	30	31	32	33	34	35
CONNECTION	F1	F2	NP	1G	2G	3G	4G	5G	6G	7G	8G	9G	10G	11G	NC	NC	P1	P2	P3	P4	P5	P6	P7	P8	P9	P10	P11	P12	P13	P14	P15	P16	NP	F2	F2

Note
1. Fn: Filament pin
2. nG : Grid pin
3. Pn : Anode pin
4. NP : No Pin
5. NC : No Connection pin

5-2

CIRCUIT DIAGRAM - KEY BOARD

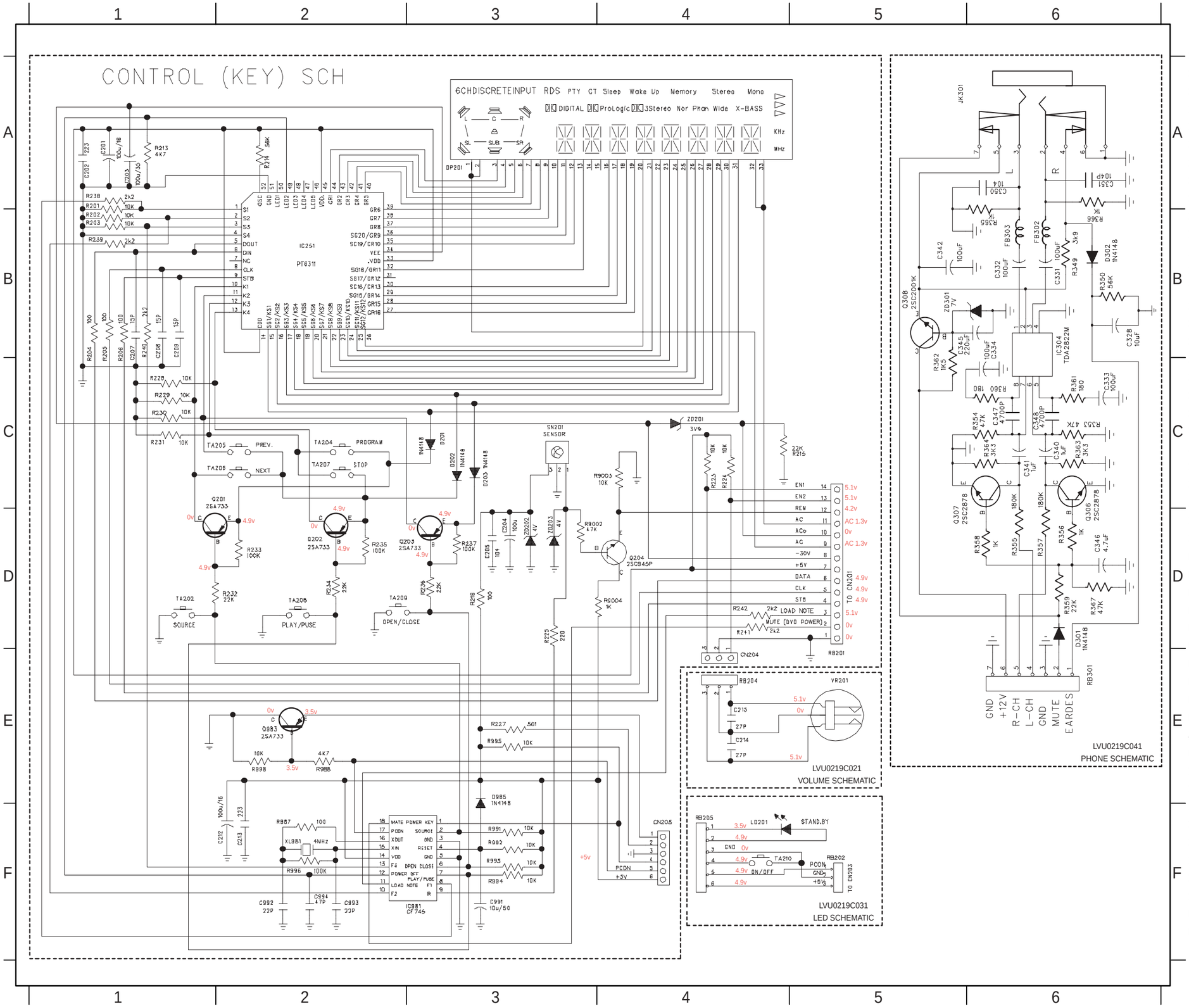

C201	A1	R203	B1	R998	E2
C202	A1	R204	B1	R9002	D3
C203	A1	R205	B1	R9003	C4
C204	D3	R206	B1	R9004	E4
C205	D3	R213	A1	RB201	D5
C207	B1	R214	A2	RB202	F5
C208	B1	R215	C5	RB204	E4
C209	B1	R216	D3	RB205	F4
C212	F2	R223	C4	RB301	E6
C213	F2	R224	C4	SN201	C3
C214	F4	R225	D3	TA202	D1
C215	F4	R227	E3	TA204	C2
C328	B6	R228	C1	TA205	C2
C331	B6	R229	C1	TA206	C2
C334	B6	R230	C1	TA207	C2
C340	C6	R231	C1	TA208	D2
C341	C6	R232	D2	TA209	D2
C342	B5	R233	D2	TA210	F4
C345	B5	R234	D2	VR201	E5
C346	D6	R235	D2	XL981	F2
C347	C6	R236	D3	FB302	B6
C348	C6	R237	D3	FB303	B6
C350	A6	R238	A1	ZD201	C4
C351	A6	R239	B1	ZD202	D3
C991	F3	R241	D4	ZD203	D3
C992	F2	R242	D4	ZD301	B5
C993	F2	R349	B6		
C994	F2	R350	B6		
D201	C3	R353	C6		
D202	C3	R354	C6		
D203	C3	R355	D6		
D301	D6	R356	D6		
D302	B6	R357	D6		
D985	E3	R358	D6		
DP201	A3	R359	D6		
IC251	B2	R360	C6		
IC304	B6	R361	C6		
IC981	F3	R362	C5		
JK301	A5	R363	C6		
LD201	E4	R364	C6		
Q201	D1	R365	B6		
Q202	D2	R366	B6		
Q203	D3	R367	D6		
Q204	D4	R987	F2		
Q306	C6	R988	E2		
Q307	D5	R991	F3		
Q308	B5	R992	F3		
Q983	E2	R993	F3		
R201	A1	R995	E3		
R202	B1	R996	F2		

5-3

PCB LAYOUT TOP VIEW - KEY BOARD

C201	B1	C331	B6	C346	A5	D301	A6	IC981	A3	JW207	A3	JW215	B3	JW223	B4	JW303	B6	R206	B3	R231	B3	R350	A6
C203	B2	C332	B6	C349	A6	D302	A6	JK301	B6	JW208	A3	JW216	A4	JW224	A5	JW304	B6	R214	B2	R234	A4	R353	A6
C204	A4	C333	B6	C991	A4	D985	A3	JW201	A1	JW209	A3	JW217	A3	JW225	A3	LD201	B1	R216	A3	R236	A1	R354	A5
C212	A2	C334	B5	CN204	A5	DP201	A2	JW202	A1	JW210	A3	JW218	A4	JW226	B3	Q306	A6	R223	A5	R238	A2	R355	A6
C214	A5	C340	A6	CN205	A1	ED301	A6	JW203	A2	JW211	A3	JW219	B4	JW227	B1	Q307	A5	R224	A5	R239	A2	R356	A6
C215	B5	C341	A6	D201	B3	FB302	B6	JW204	B2	JW212	B3	JW220	B4	JW228	B2	Q308	A6	R225	A4	R240	A2	R357	A6
C221	B3	C342	B6	D202	B4	FB303	B6	JW205	A2	JW213	B3	JW221	B4	JW301	A6	R204	B3	R227	A1	R242	B4	R358	A6
C328	A6	C345	A6	D203	A2	IC304	B6	JW206	A2	JW214	B3	JW222	A4	JW302	A6	R205	B3	R228	B3	R349	A6	R359	A6

R360	B6	RB301	A6	TA205	B4	ZD201	B5																
R361	A6	R991	A4	TA206	B4	ZD202	A3																
R362	A6	RB201	B5	TA207	A4	ZD203	A4																
R363	A6	RB202	B1	TA208	A4	ZD301	A6																
R364	A6	RB204	A5	TA209	B1																		
R365	B6	SN201	A3	TA210	A1																		
R366	B6	TA202	B5	VR201	B5																		
RB205	A1	TA204	A5	XL981	A2																		

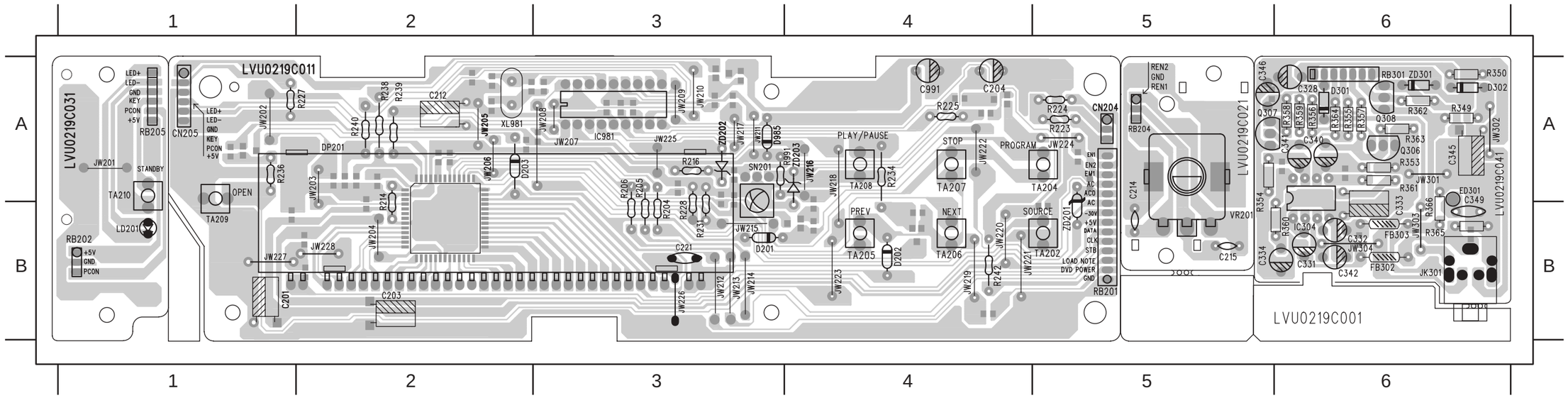

PCB LAYOUT BOTTOM VIEW - KEY BOARD

C202	A1	C213	B3	C222	A2	C993	B2	Q204	B4	R215	B5	R237	B1	R994	B3
C203	B3	C216	A5	C347	B6	C994	B2	Q983	B3	R229	A3	R241	A4	R992	B3
C205	B3	C217	B2	C348	B6	IC251	B2	R201	B2	R230	A3	R367	B6	R995	B3
C207	B2	C218	B1	C350	A6	Q201	A4	R202	B2	R233	A4	R987	B3	R996	B3
C208	B2	C219	A2	C351	A6	Q202	A4	R203	B2	R232	A4	R988	B3	R998	B3
C209	B3	C220	A2	C992	B2	Q203	B1	R213	B2	R235	A4	R993	B3	R9002	B4

R9003	B5
R9004	B4

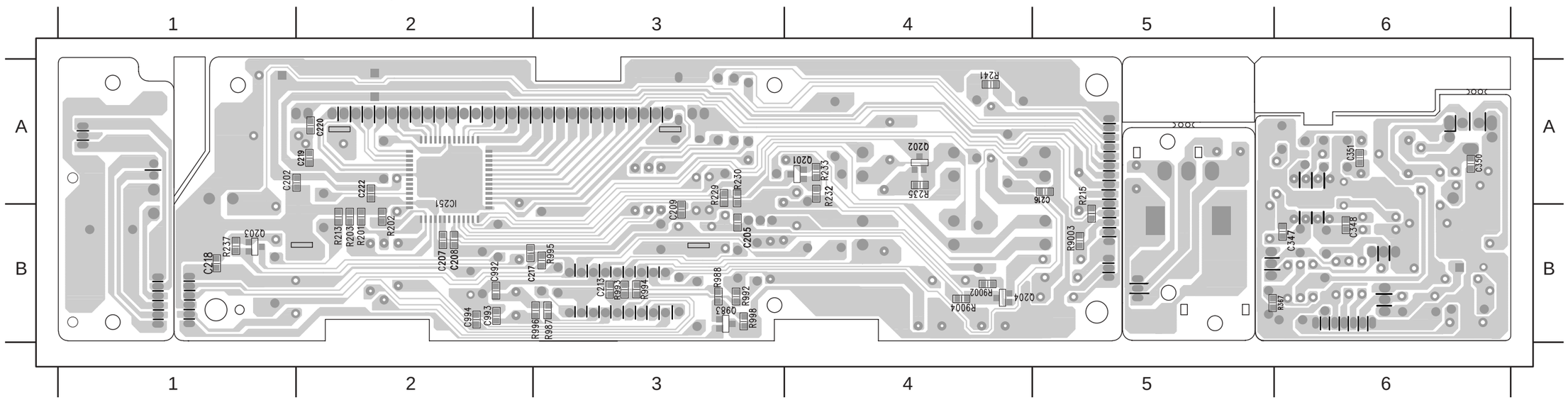

ELECTRICAL PARTS LIST - KEY, VOLUME, LED & EARPHONE BOARD

MISCELLANEOUS

DP201	9965 000 12538	VFD DISPLAY
JK301	9965 000 12505	CINCH SOCKET 6P WHITE/RED
SN201	9965 000 13071	IRT SENSOR IRM-2038F4 W/GND
TA202	4822 276 13648	TACT SWITCH
TA204	4822 276 13648	TACT SWITCH
TA205	4822 276 13648	TACT SWITCH
TA206	4822 276 13648	TACT SWITCH
TA207	4822 276 13648	TACT SWITCH
TA208	4822 276 13648	TACT SWITCH
TA209	4822 276 13648	TACT SWITCH
TA210	4822 276 13648	TACT SWITCH
VR201	9965 000 12539	ROTARY ENCODER EC16B24-204
XL981	9965 000 12540	CRYSTAL 4,00MHZ

CAPACITORS

C201	9965 000 12541	100UF 16V 20%
C202	9965 000 14136	0,1UF 50V 20%
C203	9965 000 12543	100UF 35V 20%
C204	9965 000 12541	100UF 16V 20%
C205	9965 000 14136	0,1UF 50V 20%
C207	4822 126 13486	15PF 2% 63V
C208	4822 126 13486	15PF 2% 63V
C209	4822 126 13486	15PF 2% 63V
C212	9965 000 12559	100UF 16V 20%
C213	9965 000 14136	0,1UF 50V 20%
C214	9965 000 12546	27PF 50V 5%
C215	9965 000 12546	27PF 50V 5%
C216	9965 000 14136	0,1UF 50V 20%
C217	9965 000 14136	0,1UF 50V 20%
C218	9965 000 14136	0,1UF 50V 20%
C219	9965 000 14136	0,1UF 50V 20%
C220	9965 000 14659	0,068UF 50V 20%
C221	9965 000 13094	0,068UF 50V 10%
C222	9965 000 14136	0,1UF 50V 20%
C224	9965 000 14676	0,0068UF 50V 10%
C328	9965 000 14660	10UF 25V 20%
C331	9965 000 12541	100UF 16V 20%
C332	9965 000 12541	100UF 16V 20%
C333	9965 000 12541	100UF 16V 20%
C334	9965 000 12541	100UF 16V 20%
C340	9965 000 12583	1UF 50V 20%
C341	9965 000 12583	1UF 50V 20%
C342	9965 000 12541	100UF 16V 20%
C345	9965 000 14661	220UF 16V 20%
C346	9965 000 14662	4,7UF 50V 20%
C347	9965 000 12478	4700PF 50V 20%
C348	9965 000 12478	4700PF 50V 20%
C349	9965 000 14663	0,1UF 50V +80/-20%
C350	9965 000 14136	0,1UF 50V 20%
C351	9965 000 14220	0,1UF 50V 10%
C991	9965 000 12547	10UF 50V 20%
C992	5322 122 32658	22PF 5% 50V
C993	5322 122 32658	22PF 5% 50V
C994	4822 126 13692	47PF 1% 63V

RESISTORS

R201	9965 000 12484	10K 1/10W 5%
R202	9965 000 12484	10K 1/10W 5%
R203	9965 000 12484	10K 1/10W 5%
R204	4822 050 21001	100R 1% 0,6W
R205	4822 050 21001	100R 1% 0,6W
R206	4822 050 21001	100R 1% 0,6W
R213	4822 051 20472	4K7 5% 0,1W
R214	9965 000 12560	56K 1/6W 5%
R215	4822 051 20223	22K 5% 0,1W
R216	4822 050 21001	100R 1% 0,6W
R223	4822 050 21003	10K 1% 0,6W
R224	4822 050 21003	10K 1% 0,6W
R225	9965 000 12549	220R 1/6W 5%
R227	4822 050 25601	560R 1% 0,6W
R228	4822 050 21003	10K 1% 0,6W
R229	9965 000 12484	10K 1/10W 5%
R230	9965 000 12484	10K 1/10W 5%
R231	4822 050 21003	10K 1% 0,6W
R232	4822 051 20223	22K 5% 0,1W
R233	4822 117 10837	100K 1% 0,1W
R234	4822 050 22203	22K 1% 0,6W
R235	4822 117 10837	100K 1% 0,1W
R236	4822 050 22203	22K 1% 0,6W
R237	4822 117 10837	100K 1% 0,1W
R238	9965 000 12515	2,2K 1/6W 5%
R239	9965 000 12515	2,2K 1/6W 5%
R240	9965 000 12515	2,2K 1/6W 5%
R241	4822 117 11449	2K2 5% 0,1W
R242	9965 000 12515	2,2K 1/6W 5%
R349	4822 050 21003	10K 1% 0,6W
R350	9965 000 12560	56K 1/6W 5%
R353	4822 050 24703	47K 1% 0,6W
R354	4822 050 24703	47K 1% 0,6W
R355	9965 000 12631	180K 1/6W 5%
R356	9965 000 12519	1K 1/6W 5%
R357	9965 000 12631	180K 1/6W 5%
R358	9965 000 12519	1K 1/6W 5%
R359	4822 050 22203	22K 1% 0,6W
R360	9965 000 14664	180R 1/6W 5%
R361	9965 000 14664	180R 1/6W 5%
R362	4822 050 21502	1K5 1% 0,6W
R363	9965 000 14665	3K 1/6W 5%
R364	9965 000 14665	3K 1/6W 5%
R365	9965 000 12519	1K 1/6W 5%
R366	9965 000 12519	1K 1/6W 5%
R367	9965 000 12482	47K 1/10W 5%
R987	4822 117 11373	100R 1% 1/10W
R988	4822 051 20472	4K7 5% 0,1W

5-4

ELECTRICAL PARTS LIST - KEY, VOLUME, LED & EARPHONE BOARD

R991	4822 050 21003	10K 1% 0,6W
R992	9965 000 12484	10K 1/10W 5%
R993	9965 000 12484	10K 1/10W 5%
R994	9965 000 12484	10K 1/10W 5%
R995	9965 000 12484	10K 1/10W 5%
R996	4822 117 10837	100K 1% 0,1W
R998	9965 000 12484	10K 1/10W 5%
R9002	9965 000 12482	47K 1/10W 5%
R9003	9965 000 12484	10K 1/10W 5%
R9004	4822 051 20102	1K 5% 0,1W

COILS & FILTERS

FB302	9965 000 12470	BEAD FERITE 100R AT 100MHZ
FB303	9965 000 12470	BEAD FERITE 100R AT 100MHZ

DIODES

D201	4822 130 30621	1N4148
D202	4822 130 30621	1N4148
D203	4822 130 30621	1N4148
D301	4822 130 30621	1N4148
D302	4822 130 30621	1N4148
D985	4822 130 30621	1N4148
LD201	9965 000 12537	LED 3 DIA RED ROUND
ZD201	9965 000 12554	ZENER 3,8-4,0V 0,5W
ZD202	4822 130 34233	BZX79-B5V1
ZD203	4822 130 34233	BZX79-B5V1
ZD301	4822 130 80272	MTZJ7,5C

TRANSISTORS & INTEGRATED CIRCUITS

IC251	9965 000 12550	PT6311(PTC)
IC304	9965 000 12563	TDA2822
IC981	9965 000 12551	CF745
Q201	9965 000 14175	2SA733Q,P
Q202	9965 000 14175	2SA733Q,P
Q203	9965 000 14175	2SA733Q,P
Q204	9965 000 09584	2SC945
Q306	4822 130 43818	2SC2878-A
Q307	4822 130 43818	2SC2878-A
Q308	4822 130 41651	2SC2001L
Q983	9965 000 14175	2SA733Q,P

Note: Only the parts mentioned in this list are normal service spare parts.

TUNER BOARD

TABLE OF CONTENTS

Tuner Adjustment Table 6-1
Block Diagram 6-2
Circuit Diagram 6-3
PCB Layout Top View 6-4
PCB Layout Bottom View 6-5
Electrical Parts List 6-6

TUNER ADJUSTMENT TABLE

Waverange	Input frequency	Input	Tuned to	Adjust	Output	Scope/Voltmeter
VARICAP ALIGNMENT						
FM 87.5 - 108MHz (50kHz grid)			108MHz	5130	1	6.5V ±0.2V
			87.5MHz	check		1.5V ±0.5V
AM 531 - 1602kHz (9kHz grid) (22S / 30S / 21R / 21H / 33S / 35S)			1602KHz	TC002		7.8V ±0.2V
			531KHz	T003		1.1V ±0.2V
AM 530-1700kHz (10kHz grid) (21L / 21L / 37S)			1700KHz	TC002		8.0V ±0.2V
			530KHz	T003		1.1V ±0.2V
FM - IF						
FM	10.7MHz, 50mV continuous wave	F	IC 101 23 short circuit to block AFC 200P	T105	2	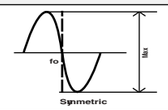
FM - RF						
FM	108MHz	A	108MHz			MAX
	87.5MHz	mod=1kHz Δf=±22.5kHz	87.5MHz			
AM IF						
AM	450kHz Connect pin 29 of IC 101 (AM Osc.) with short wire to ground (pin 28)	C Δf = ±15kHz V_{RF} = 3mV	IC 101 24 100nF R220	T102	4	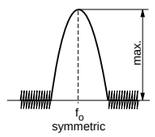
AM AFC **MW**						
AM RF 3)						
MW	1557kHz	B Δf = ±30kHz V_{RF} as low as possible	1557kHz	TC001	4	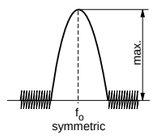
	576kHz		576kHz	T002		
MW	1650kHz		1650kHz	TC001		
	580kHz		580kHz	T002		

Use Service Testprogram. By selecting the TUNER TEST test frequencies will be stored as preset frequencies automatically.

1) If sensitivity of frequency counter is too low adjust to max. channel separation (input signal: stereo left 90% + 9%, adjust output on right channel to minimum)

2) RC network serves for damping the IF-filter while adjusting the other one.

3) For AM RF adjustments the original frame antenna has to be used!

6-2

BLOCK DIAGRAM

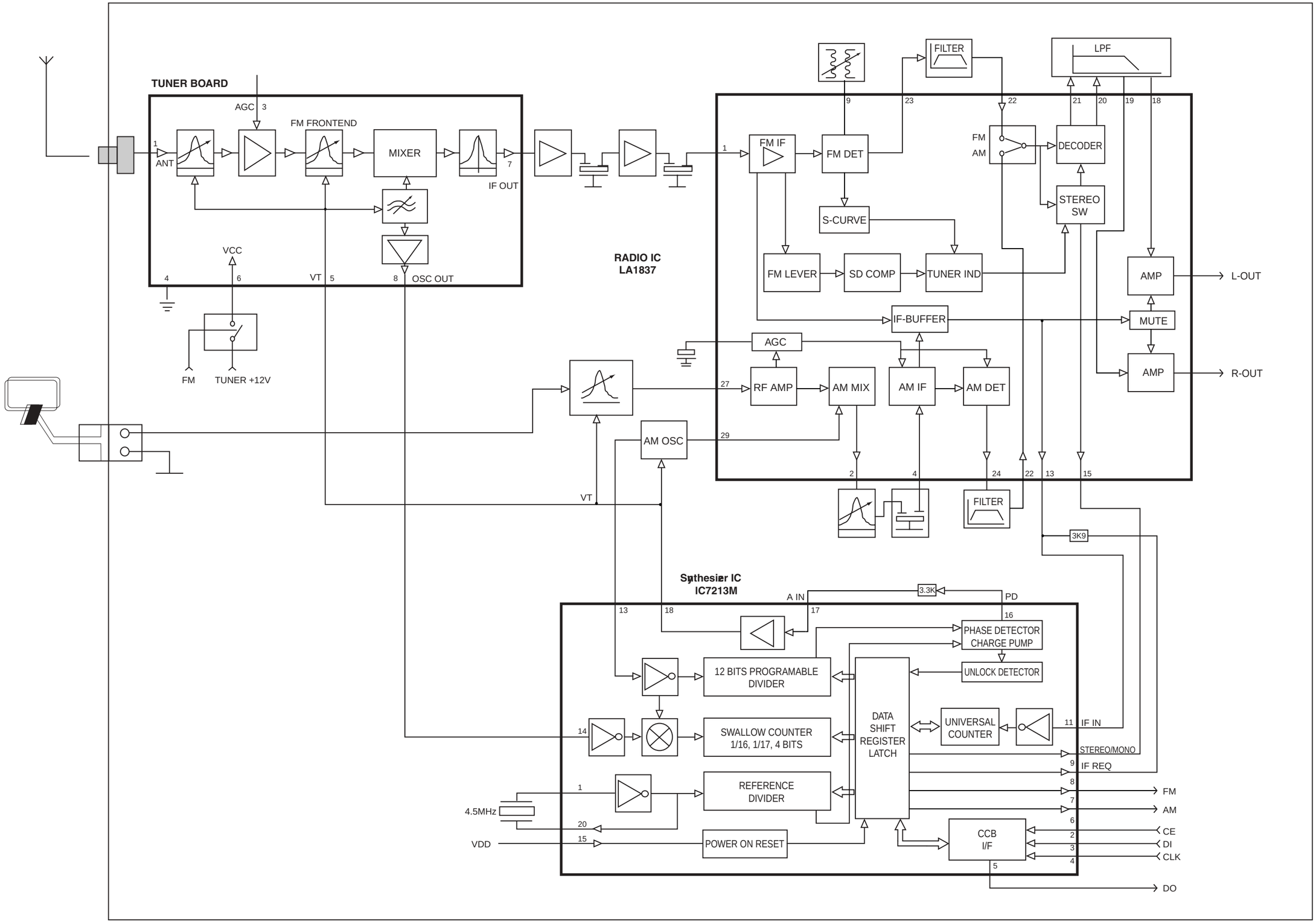

6-3

CIRCUIT DIAGRAM

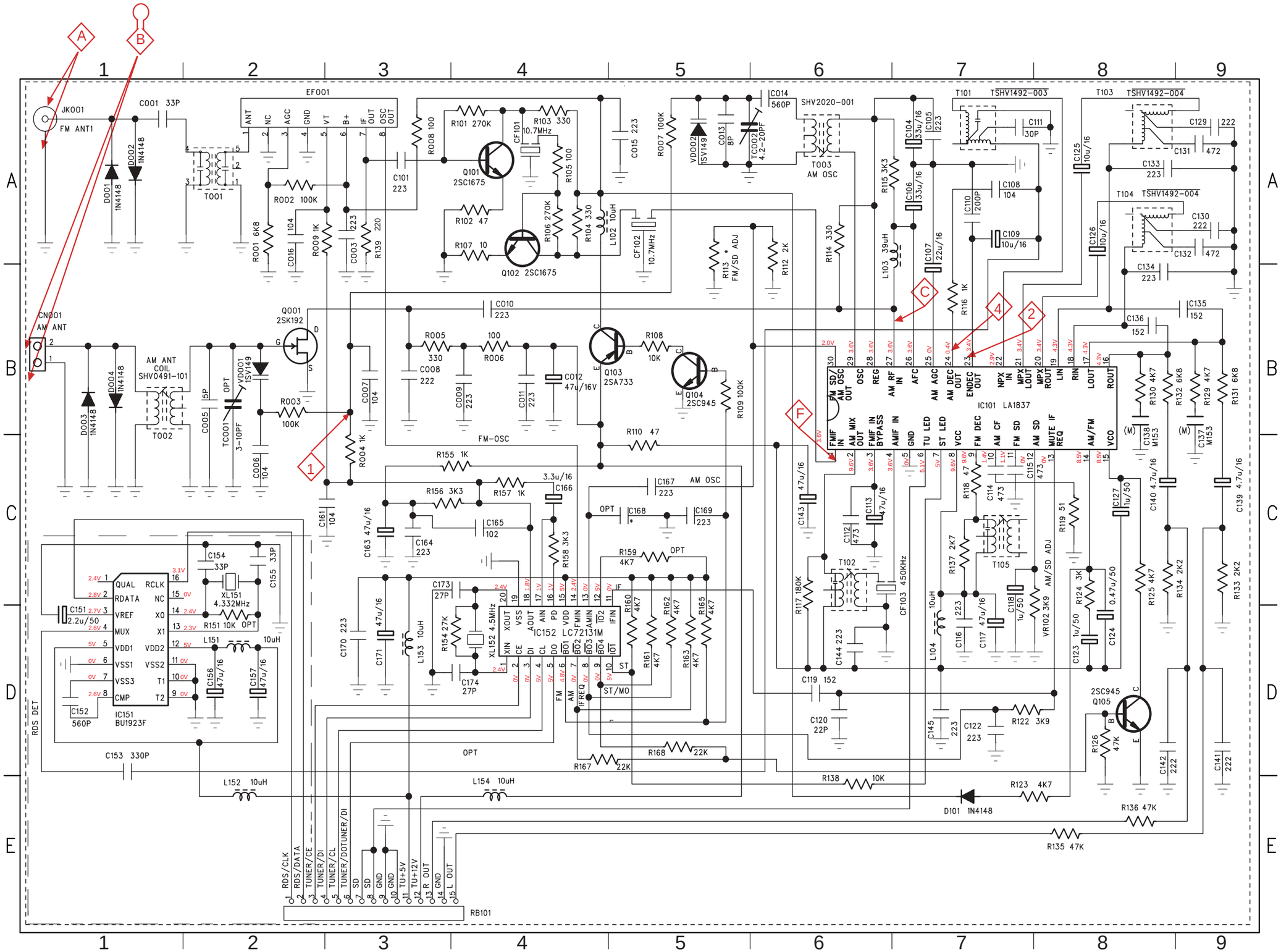

C001	A1	JK001	A1
C003	A3	L102	A5
C005	A2	L103	B7
C006	C2	L104	D7
C007	C3	L151	D2
C008	B3	L152	E2
C009	B4	L153	D3
C010	B4	L154	E4
C011	B4	Q101	A4
C012	B4	Q102	B4
C013	A4	Q103	B5
C014	A6	Q104	B5
C015	A5	Q105	D8
C016	A2	Q001	B2
C101	A3	R001	B2
C104	A7	R002	A2
C105	A7	R003	C3
C106	A7	R004	C3
C107	B7	R005	B3
C108	A8	R006	B4
C109	A8	R007	A5
C110	A7	R008	A3
C111	A7	R009	A3
C112	C6	R101	A4
C113	C6	R102	A4
C114	C7	R103	A4
C115	C7	R104	A4
C116	D7	R105	A4
C117	D7	R106	A4
C118	C7	R107	B4
C119	D9	R108	B5
C120	D6	R109	B5
C122	D7	R110	C5
C123	D8	R112	A3
C124	D8	R113	B6
C125	A8	R114	B6
C126	A8	R115	A7
C127	C8	R116	B7
C129	A9	R117	D6
C130	A9	R118	C7
C131	A9	R119	C8
C132	A9	R122	D7
C133	A9	R123	E7
C134	B8	R124	D8
C135	B5	R125	D8
C136	B8	R126	E8
C137	C9	R129	B9
C138	C8	R130	B8
C139	C9	R131	B9
C140	C9	R132	B9
C141	D9	R133	D9
C142	E9	R134	C9
C143	C6	R135	E8
C144	D6	R136	E8
C145	D7	R137	C7
C151	D1	R138	E6
C152	D1	R139	A3
C153	E1	R151	D2
C154	C2	R154	D4
C155	C2	R155	C4
C156	D2	R156	C3
C157	D2	R157	C4
C161	C3	R158	C4
C163	C3	R159	C5
C164	C3	R160	D5
C165	C4	R161	D5
C166	C4	R162	D5
C167	C5	R163	D5
C168	C5	R165	D5
C169	C5	R167	E4
C170	D3	R168	E5
C171	D3	RB101	E3
C173	D4	T101	A7
C174	D4	T102	D6
CF101	A4	T103	A9
CF102	A5	T104	A9
CF103	D7	T105	C7
CN001	B1	TC001	B2
D101	E7	TC002	A6
D001	A1	T001	A2
D002	A1	T002	C2
D003	B1	T003	A6
D004	B1	VD001	B2
EF001	A2	VD002	A5
IC101	C7	VR101	B5
IC151	D1	VR102	D8
IC152	D4	XL151	D2
		XL152	D4

6-4

PCB LAYOUT TOP VIEW

C005	B5	C106	A4	C124	D3	C167	A3	CN001	A6	J103	C4	J111	C2	J119	D1	L102	A2	Q105	D3	R105	C5	RB102A	A5	T105	D4
C007	A3	C107	C4	C125	C3	C168	A3	D001	C6	J104	C4	J112	D2	J120	D1	L103	B4	Q101	B5	R108	A2	T001	D5	TC001	A5
C011	A2	C109	B4	C126	C3	C171	C1	D002	C6	J105	B4	J113	D2	J121	D1	L104	D4	Q102	C5	R110	D4	T002	A5	TC002	A3
C012	B1	C113	C4	C127	D3	C173	A1	D003	A6	J106	A3	J114	D2	J122	D1	L151	C2	Q103	A2	R123	C3	T003	A4	IC152	B1
C014	A4	C117	C4	C139	D3	C174	A1	D004	A6	J107	D3	J115	A2	J123	D1	L153	D1	R005	B5	R155	B2	T101	B3	VD001	B5
C015	A2	C118	D4	C140	C3	CF101	C5	D101	B3	J108	C3	J116	A1	JK001	B6	L154	D2	R007	A3	RB101	D2	T102	D5	VD002	A3
C101	A5	C119	C1	C143	D4	C164	A1	CF102	C5	J109	A2	J102	A4	J117	B1	Q001	B5	R008	B5	RB102A	A5	T103	A3	XL152	B1
C104	A4	C123	D3	C163	A1	C166	B1	CF103	D5	J101	A5	J110	C2	J118	C1	Q104	A1	R104	B5	RB103	D6	T104	A3		

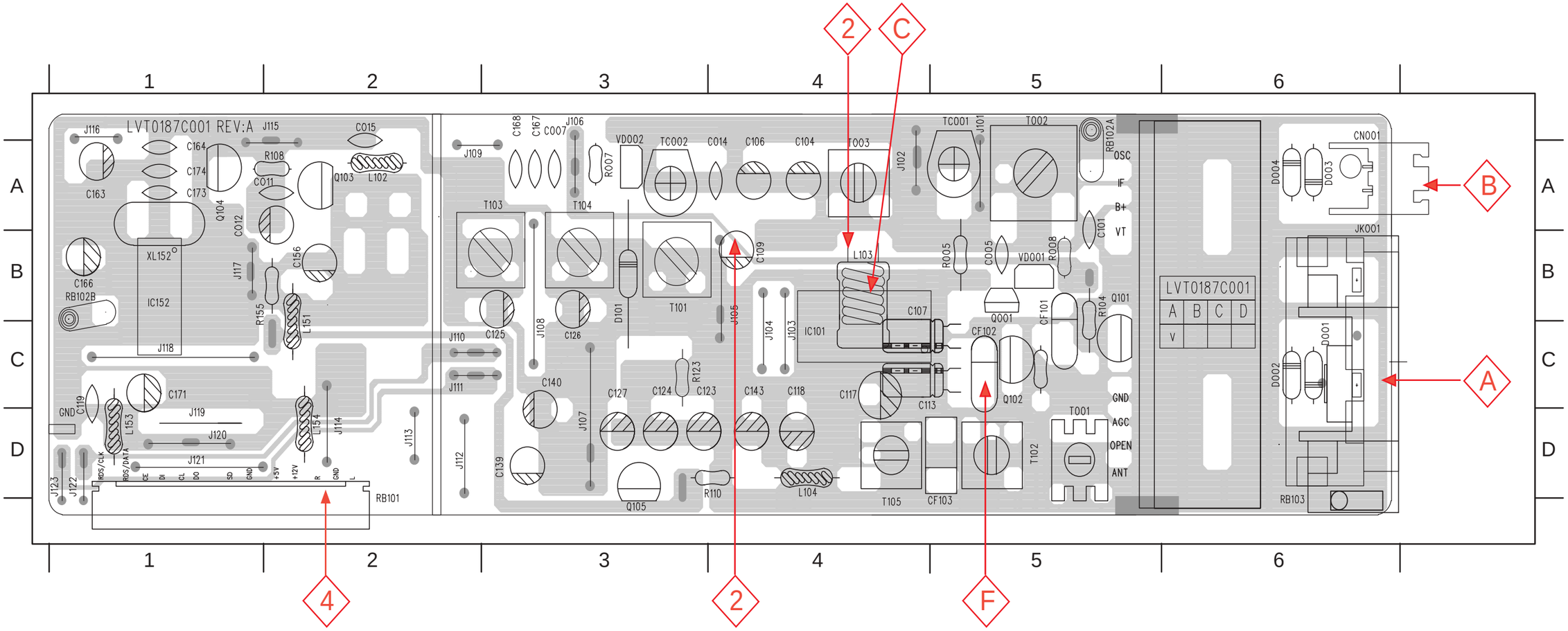

6-5

PCB LAYOUT BOTTOM VIEW

C001	D2	C105	A3	C120	D6	C134	B4	C145	D2	R002	B1	R106	C2	R117	C2	R130	C4	R138	C6	R160	C6
C003	A2	C108	B3	C121	C4	C135	B4	C161	A6	R003	A2	R107	C2	R118	C3	R131	D4	R139	A1	R161	C6
C006	B2	C110	B3	C122	B6	C136	B4	C165	A6	R004	A5	R109	A6	R119	D3	R132	C4	R151	A5	R162	C6
C008	B3	C111	B4	C129	B5	C137	D4	C169	B6	R006	A5	R112	B3	R122	D6	R133	D5	R154	A6	R163	B6
C009	B2	C112	C3	C130	B4	C138	D4	C170	C6	R009	A2	R113	B3	R124	D4	R134	D5	R156	A6	R165	B6
C010	B3	C114	C3	C131	A5	C141	D5	IC101	C3	R101	B2	R114	A3	R125	D4	R135	D5	R157	A6	R167	B6
C013	A4	C115	D3	C132	A4	C142	D5	IC152	A6	R102	C2	R115	A3	R126	D4	R136	D5	R158	B6	R168	C6
C016	B2	C116	D3	C133	B4	C144	D4	R001	D2	R103	B2	R116	B3	R129	D4	R137	D3	R159	C6	VR102	D3

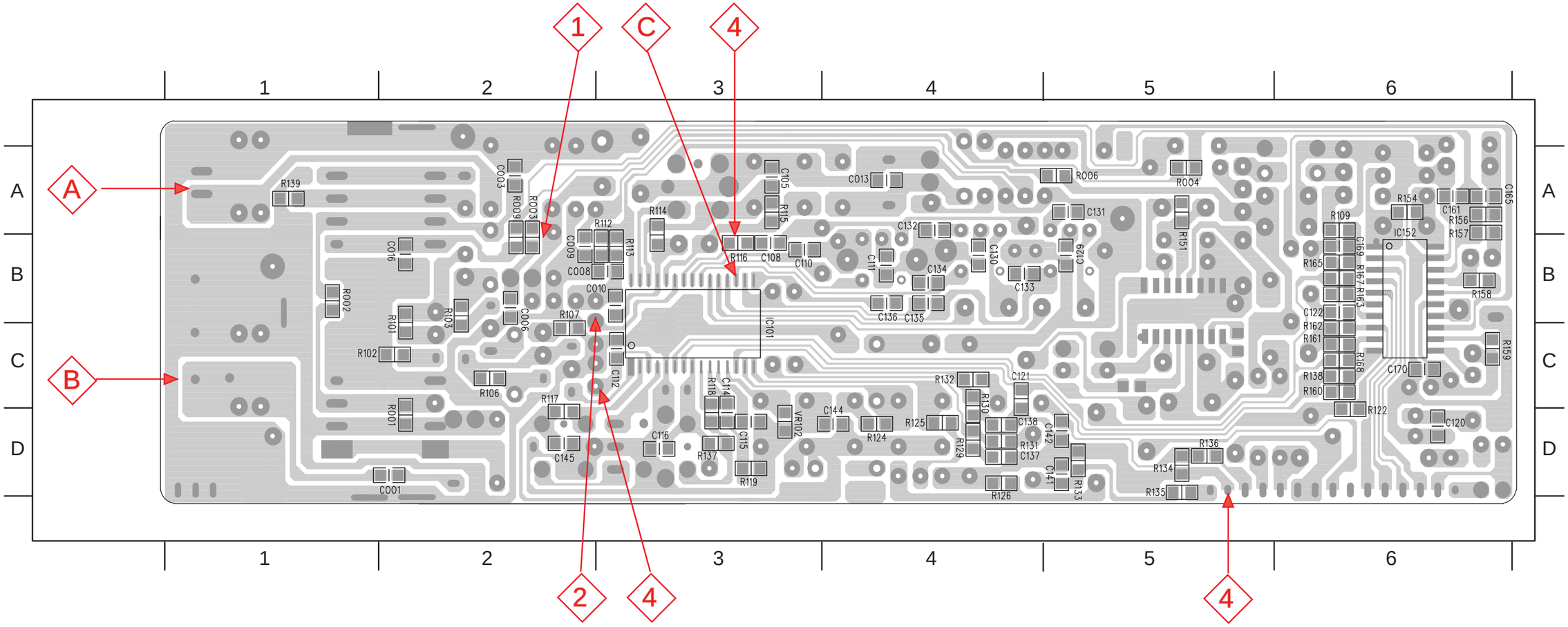

ELECTRICAL PARTS LIST - TUNER BOARD

MISCELLANEOUS

CN001	9965 000 12565	CONNECTOR 2PIN, AM ANTENNA	
EF001	9965 000 14228	TUNER F.END KST-F404VA2	/21H/30S
EF001	9965 000 12566	TUNER F.END FTE3-500H	/37/37S
JK001	9965 000 12567	FM ANTENNA SOCKET	
XL152	9965 000 14129	X'TAL 4,5MHZ HC-49/U	

CAPACITORS

C001	2238 861 18339	33PF 50V 1%	
C003	9965 000 12573	0,022UF 50V 20%	
C005	9965 000 12574	5PF 50V +/-0,5PF	
C006	4822 126 14585	100NF 10% 50V	
C007	2038 554 00065	100NF +80/-20% 50V	
C008	9965 000 12585	0,0022UF 50V 10%	
C009	9965 000 12573	0,022UF 50V 20%	
C010	9965 000 12573	0,022UF 50V 20%	
C011	4822 122 30103	22NF 80% 63V	
C012	9965 000 12575	47UF 16V 20%	
C013	9965 000 13454	8PF 50V 5%	
C014	9965 000 12577	560P 50V 5%	
C015	4822 122 30103	22NF 80% 63V	
C016	4822 126 14585	100NF 10% 50V	
C101	4822 122 30103	22NF 80% 63V	
C104	9965 000 13074	33UF 100V 20%	
C105	9965 000 12573	0,022UF 50V 20%	
C106	9965 000 13074	33UF 100V 20%	
C107	9965 000 13075	22UF 16V 20%	
C108	4822 126 14585	100NF 10% 50V	
C109	9965 000 12580	10UF 16V 20%	
C110	9965 000 12581	200PF 50V 5%	
C111	9965 000 12582	30PF 50V 5%	
C112	9965 000 12524	0,047UF 50V 20%	
C113	9965 000 13076	47UF 16V 20%	
C114	9965 000 12524	0,047UF 50V 20%	
C115	9965 000 12524	0,047UF 50V 20%	
C116	9965 000 12573	0,022UF 50V 20%	
C117	9965 000 13076	47UF 16V 20%	
C118	9965 000 12583	1UF 50V 20%	
C119	9965 000 13077	1500PF 50V 10%	
C120	5322 122 32658	22PF 5% 50V	
C122	9965 000 12573	0,022UF 50V 20%	
C123	9965 000 12583	1UF 50V 20%	
C124	9965 000 12584	0,47UF 50V 20%	
C125	9965 000 12580	10UF 16V 20%	
C126	9965 000 12580	10UF 16V 20%	
C127	9965 000 12583	1UF 50V 20%	
C129	9965 000 12585	0,0022UF 50V 10%	
C130	9965 000 12585	0,0022UF 50V 10%	
C131	5322 126 10223	4,7NF 10% 63V	
C132	5322 126 10223	4,7NF 10% 63V	
C133	9965 000 12573	0,022UF 50V 20%	
C134	9965 000 12573	0,022UF 50V 20%	
C135	4822 126 13344	1,5NF 5% 63V	
C136	4822 126 13344	1,5NF 5% 63V	
C137	4822 126 13188	15NF 5% 63V	
C138	4822 126 13188	15NF 5% 63V	
C139	9965 000 12586	4,7UF 16V 20%	
C140	9965 000 12586	4,7UF 16V 20%	
C141	9965 000 12585	0,0022UF 50V 10%	
C142	9965 000 12585	0,0022UF 50V 10%	
C143	9965 000 14125	47UF 16V 20%	
C144	9965 000 12573	0,022UF 50V 20%	
C145	9965 000 12573	0,022UF 50V 20%	
C161	4822 126 14585	100NF 10% 50V	
C163	9965 000 12575	47UF 16V 20%	
C164	4822 122 30103	22NF 80% 63V	
C165	9965 000 12588	1000PF 50V 5%	
C166	9965 000 13079	3,3UF 16V 20%	
C167	4822 122 30103	22NF 80% 63V	
C169	9965 000 12573	0,022UF 50V 20%	
C170	9965 000 12573	0,022UF 50V 20%	
C171	9965 000 13076	47UF 16V 20%	
C173	9965 000 12546	27PF 50V 5%	
C174	9965 000 12546	27PF 50V 5%	
TC001	4822 125 50692	TRIMMER 3-10PF	
TC002	4822 125 50693	TRIMMER 4,2-20PF N450	

RESISTORS

R001	9965 000 12591	6,8K 1/10W 5%	
R002	4822 117 10837	100K 1% 0,1W	
R003	4822 117 10837	100K 1% 0,1W	
R004	4822 051 20102	1K 5% 0,1W	
R005	9965 000 12592	330R 1/6W 5%	
R006	4822 117 11373	100R 1% 1/10W	
R007	4822 050 21004	100K 1% 0,6W	
R008	4822 050 21001	100R 1% 0,6W	/21H/30S
R009	4822 051 20102	1K 5% 0,1W	
R101	4822 051 20274	270K 5% 0,1W	
R102	4822 051 20479	47R 5% 0,1W	
R103	4822 117 13577	330R 5% 1/10W	
R104	9965 000 12592	330R 1/6W 5%	
R105	4822 050 21001	100R 1% 0,6W	
R106	4822 051 20274	270K 5% 0,1W	
R107	4822 051 20109	10R 5% 0,1W	
R108	4822 050 21003	10K 1% 0,6W	
R109	4822 117 10837	100K 1% 0,1W	
R110	9965 000 12593	47R 1/6W 5%	
R112	4822 051 20332	3K3 5% 0,1W	
R114	4822 117 13577	330R 5% 1/10W	
R115	4822 051 20332	3K3 5% 0,1W	
R116	4822 051 20102	1K 5% 0,1W	
R117	2120 108 92641	180K 1% 1/10W	
R118	4822 051 20479	47R 5% 0,1W	
R119	4822 051 20519	51R 5% 0,1W	
R122	4822 051 20392	3K9 5% 0,1W	

6-6

ELECTRICAL PARTS LIST - TUNER BOARD

R123	9965 000 09725	4,7K 1/6W 5%	
R124	4822 051 20302	3K 5% 0,1W	
R125	4822 051 20102	1K 5% 0,1W	
R126	9965 000 12482	47K 1/10W 5%	
R129	4822 051 20472	4K7 5% 0,1W	
R130	4822 051 20472	4K7 5% 0,1W	
R131	9965 000 12591	6,8K 1/10W 5%	
R132	9965 000 12591	6,8K 1/10W 5%	
R133	4822 117 11449	2K2 5% 0,1W	
R134	4822 117 11449	2K2 5% 0,1W	
R135	9965 000 12482	47K 1/10W 5%	
R136	9965 000 12482	47K 1/10W 5%	
R137	4822 117 12955	2K7 1% 0,1W	
R138	9965 000 12484	10K 1/10W 5%	
R139	9965 000 12548	220R 1/10W 5%	/37/37S
R139	4822 051 20561	560R 1/10W 5%	/21H/30S
R154	4822 051 20105	1M 5% 0,1W	
R155	9965 000 12519	1K 1/6W 5%	
R156	4822 051 20332	3K3 5% 0,1W	
R157	4822 051 20102	1K 5% 0,1W	
R158	4822 051 20332	3K3 5% 0,1W	
R159	4822 051 20472	4K7 5% 0,1W	
R160	4822 051 20472	4K7 5% 0,1W	
R161	4822 051 20472	4K7 5% 0,1W	
R162	4822 051 20472	4K7 5% 0,1W	
R163	4822 051 20472	4K7 5% 0,1W	
R165	4822 051 20472	4K7 5% 0,1W	
R167	4822 051 20223	22K 5% 0,1W	
R168	4822 051 20223	22K 5% 0,1W	
VR102	4822 051 20392	3K9 5% 0,1W	

COILS & FILTERS

CF101	9965 000 13073	CER FILTER SFE10,7MA	/21H/30S
CF101	4822 242 10614	CER FILTER SFE10,7MA	/37/37S
CF102	9965 000 12564	CER FILTER SFE-10,7MS	
CF103	9965 000 13181	CER FILTER SFU450B	
L102	9965 000 12568	CHOKE 10UH	
L103	9965 000 12569	CHOKE 39MH	
L104	9965 000 12568	CHOKE 10UH	
L153	9965 000 12568	CHOKE 10UH	
L154	9965 000 12568	CHOKE 10UH	
T001	9965 000 12597	OSC FM S-8N	
T002	4822 157 71813	ANT OSC AM	
T003	9965 000 13081	OSC AM 108UH 796KHZ	
T101	9965 000 12599	FILTER 78KHZ	
T102	9965 000 14126	AM IFT 455KHZ	
T103	9965 000 12600	FILTER 16KHZ	
T104	9965 000 12600	FILTER 16KHZ	
T105	9965 000 14127	FM IFT 10,7MHZ Q=60 MIN	

DIODES

D001	4822 130 30621	1N4148
D002	4822 130 30621	1N4148
D003	4822 130 30621	1N4148
D004	4822 130 30621	1N4148
D101	4822 130 30621	1N4148
VD001	4822 130 81673	1SV149
VD002	4822 130 81673	1SV149

TRANSISTORS & INTEGRATED CIRCUITS

IC101	9965 000 12594	LA1837
IC152	9965 000 12595	LC72131M
Q001	4822 130 63173	2SK192AY
Q101	4822 130 41595	2SC1675L
Q102	4822 130 41595	2SC1675L
Q103	4822 130 63876	2SA733R
Q104	4822 130 41198	2SC945P
Q105	4822 130 41198	2SC945P

Note: Only the parts mentioned in this list are normal service spare parts.

DVD LOADER KIT572SE

It is not recommended for component repair on this Module but to replace the major assembly when it becomes defective. Therefore limited service parts list are published in this chapter.

The Circuit & Layout diagrams are published for reference only. The repair assistance on DVD section is given on Chapter 2.

TABLE OF CONTENTS

Wiring Connection 7-1
Schematic Diagram (Top Left) 7-2
Schematic Diagram (Top Right) 7-3
Schematic Diagram (Bottom Left) 7-4
Schematic Diagram (Bottom Right) 7-5
Layout Diagram (Side A and B)..... ..7-6
Explorer View (DVD Loader).....7-7
Mechanical Part list.....7-8

WIRING CONNECTION

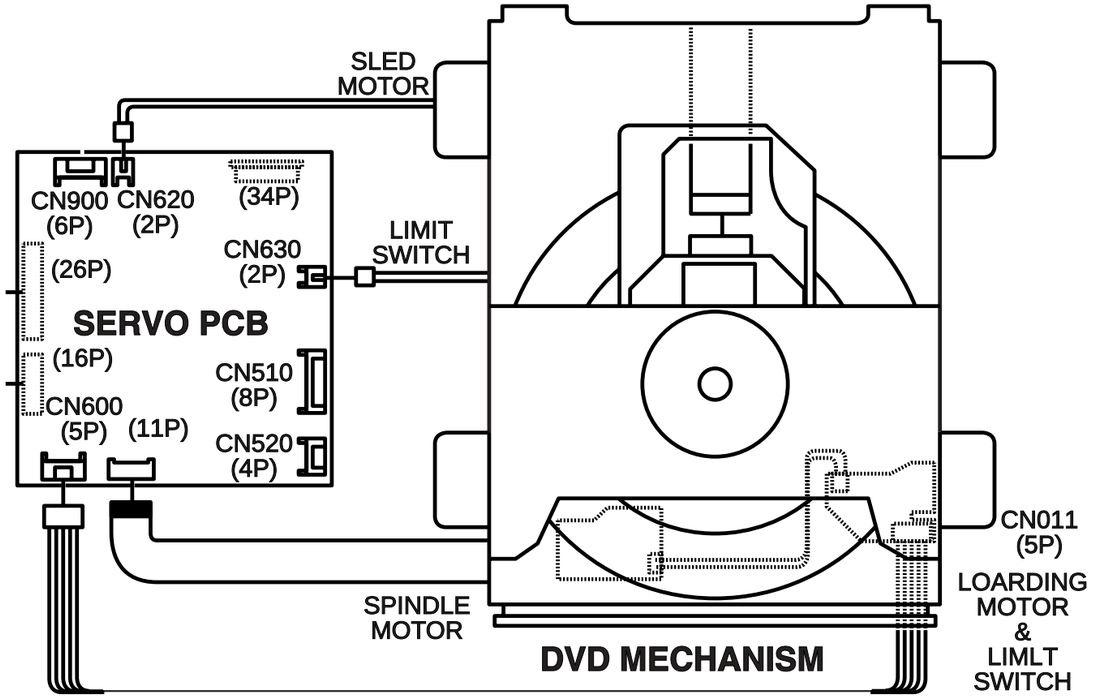

7-2

SCHEMATIC DIAGRAM (TOP LEFT) - SERVO BOARD

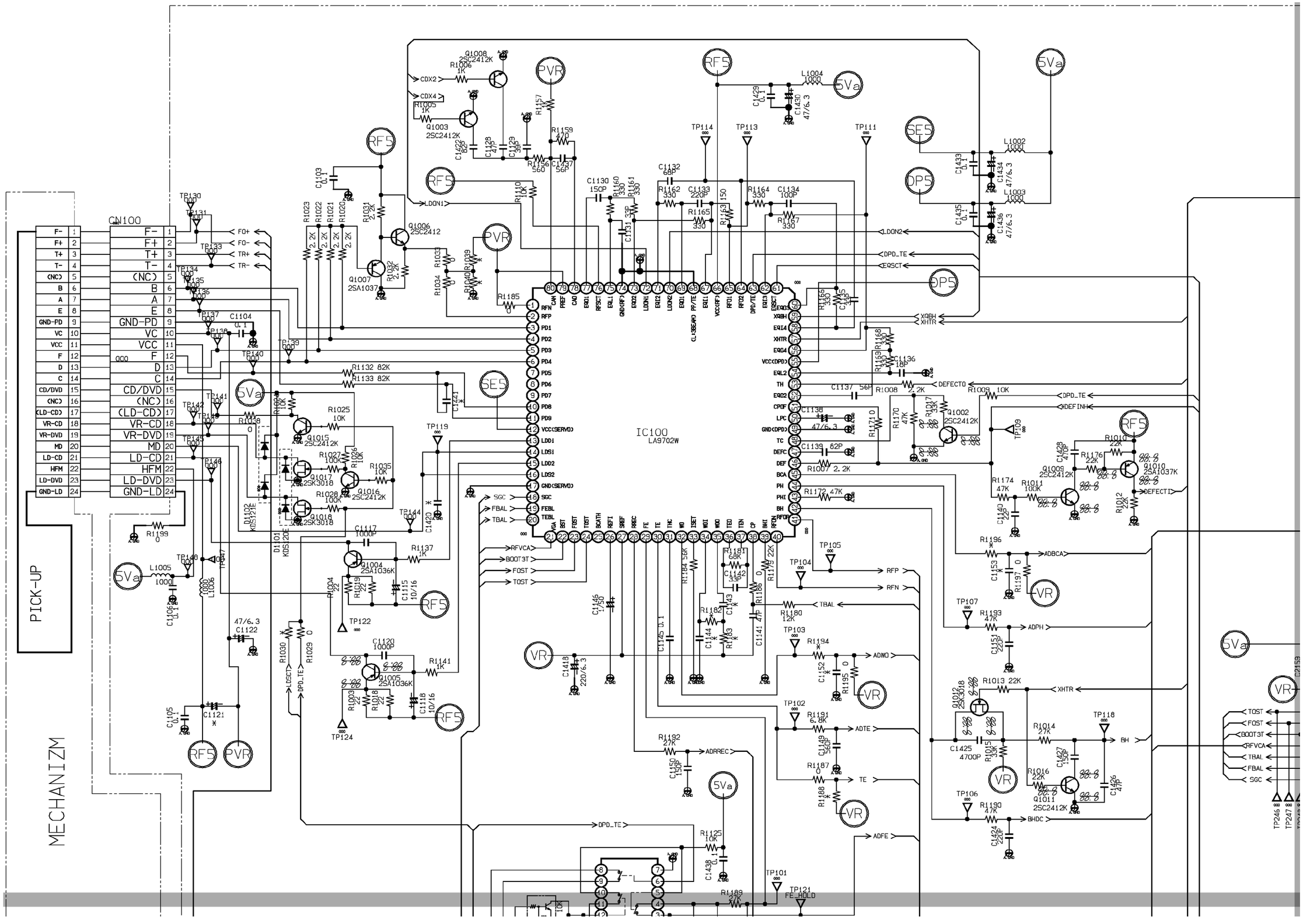

7-3

SCHEMATIC DIAGRAM (TOP RIGHT) - SERVO BOARD

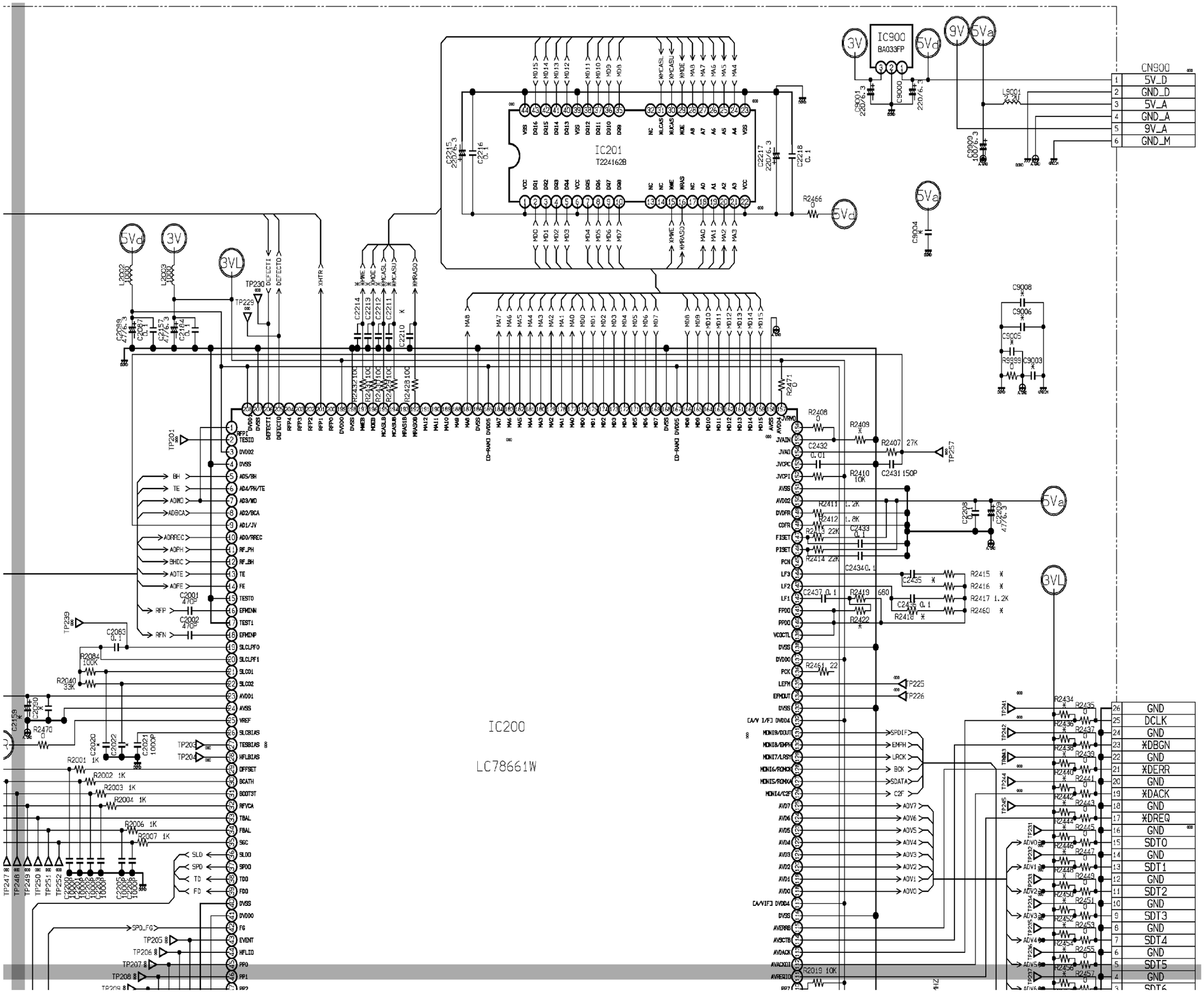

7-4

SCHEMATIC DIAGRAM (BOTTOM LEFT) - SERVO BOARD

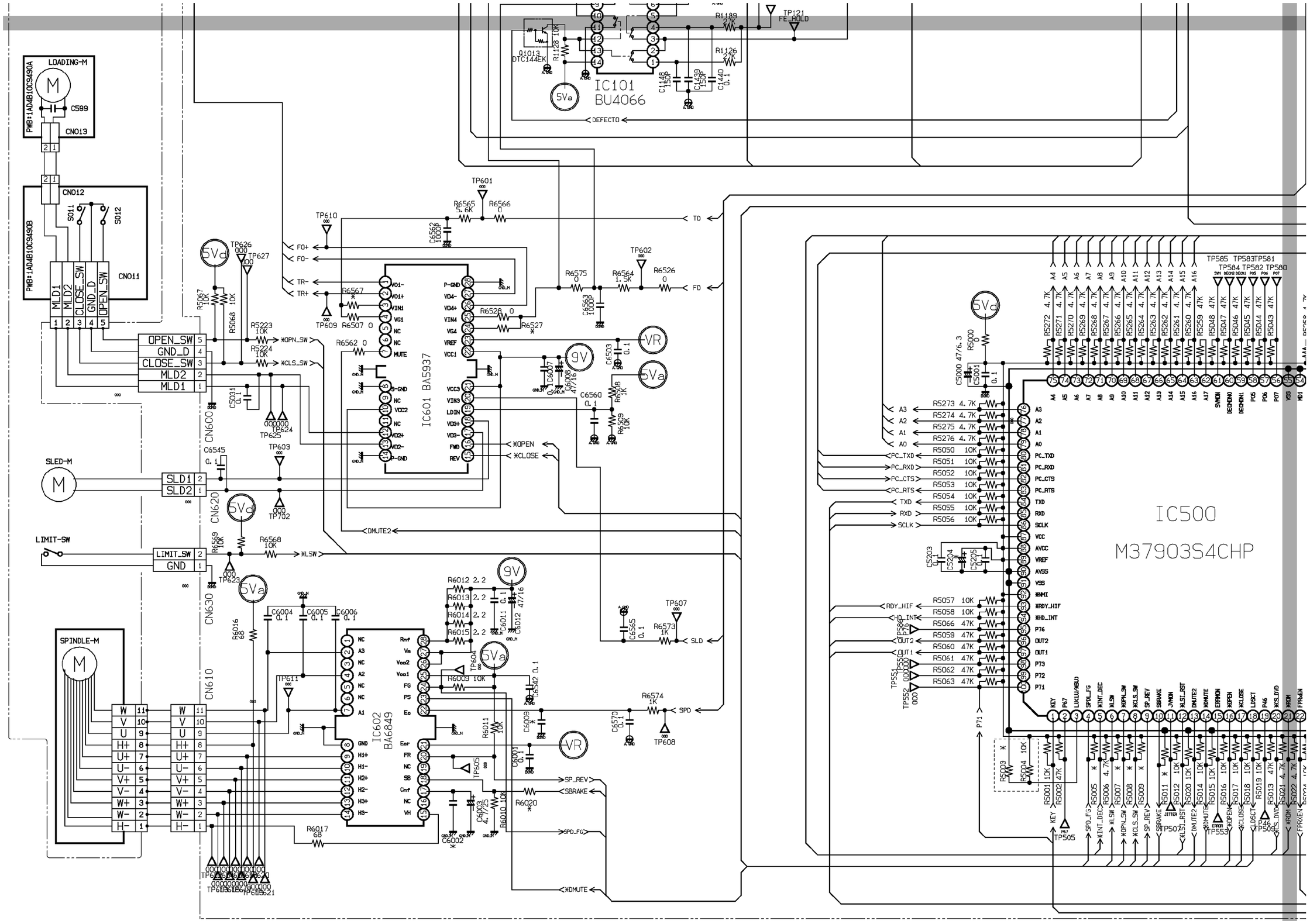

SCHEMATIC DIAGRAM (BOTTOM RIGHT) - SERVO BOARD

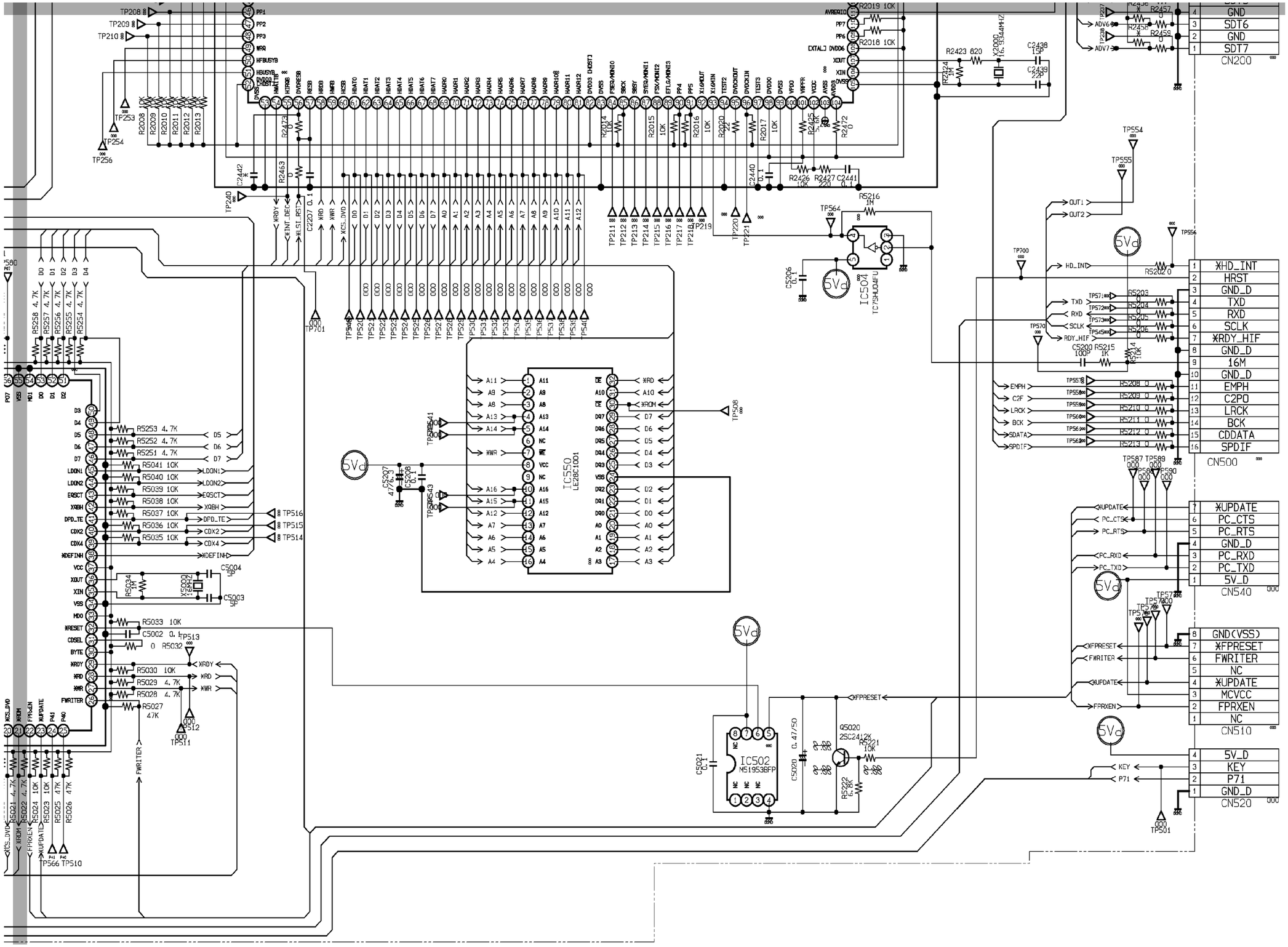

LAYOUT DIAGRAM (DVD SIDE A)

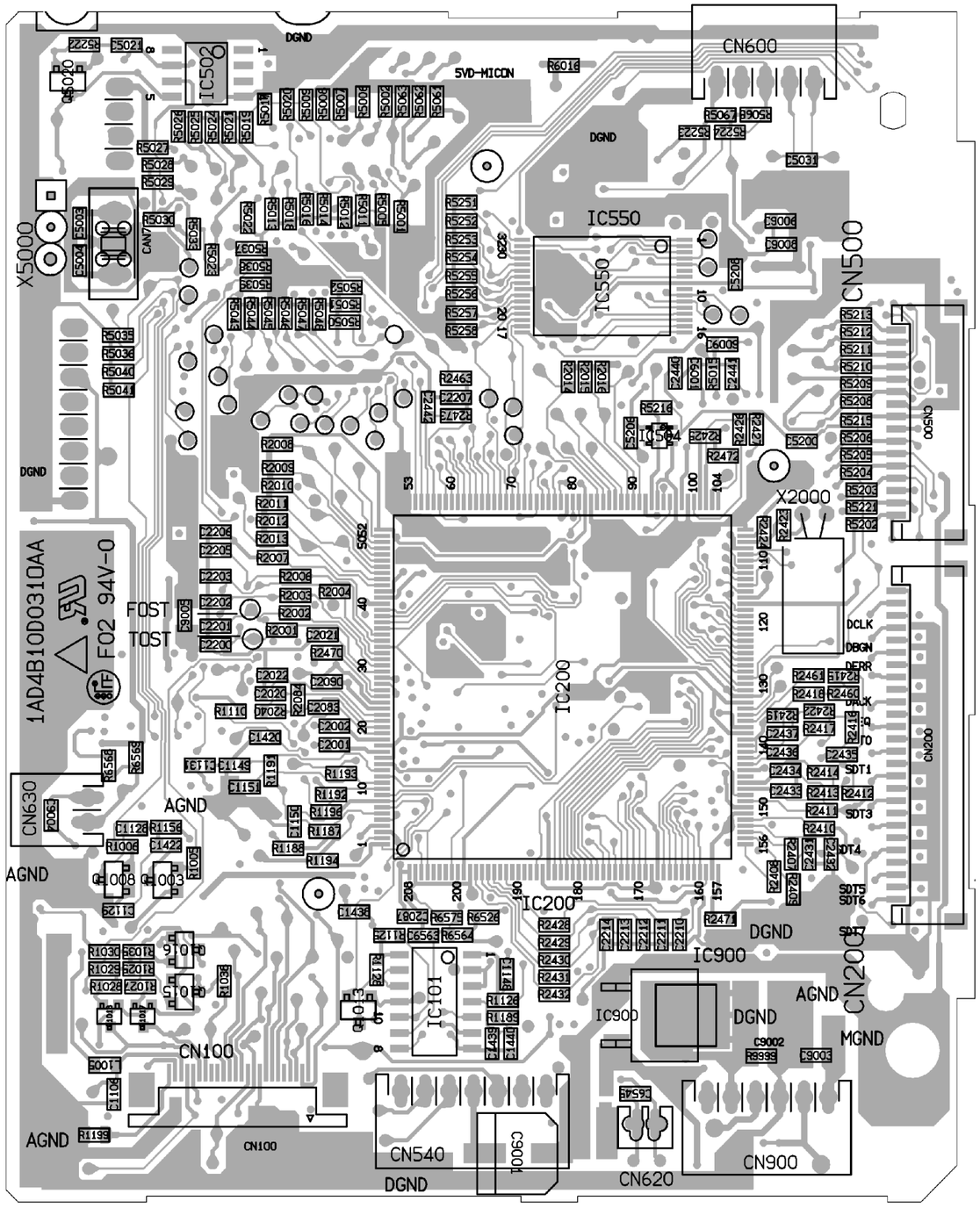

LAYOUT DIAGRAM (DVD SIDE B)

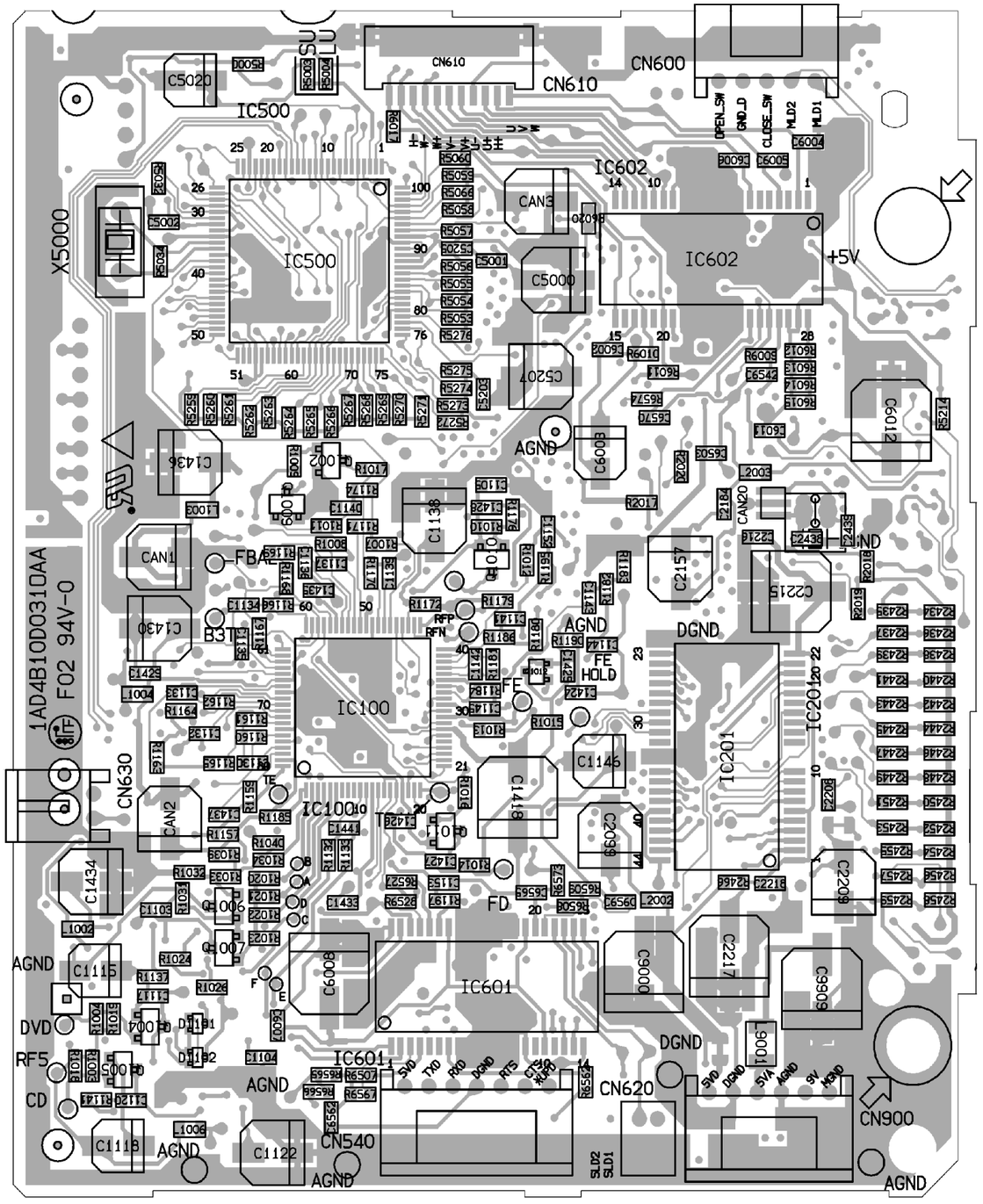

Exploded View - DVD Loader

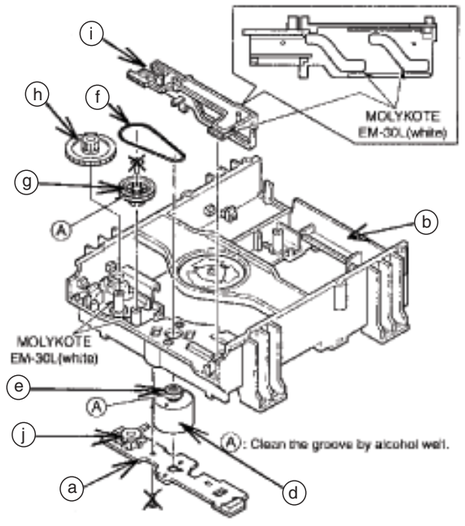

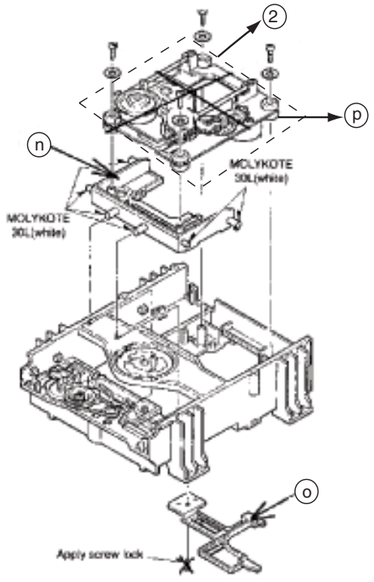

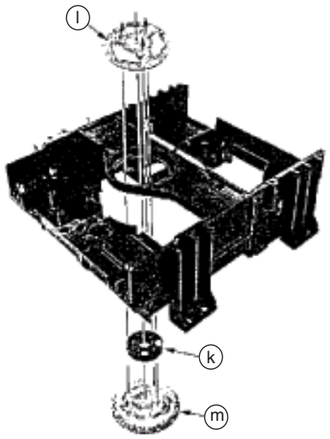

Tray parts.

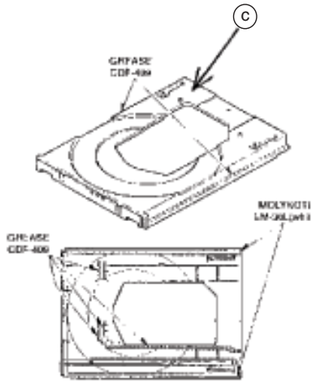

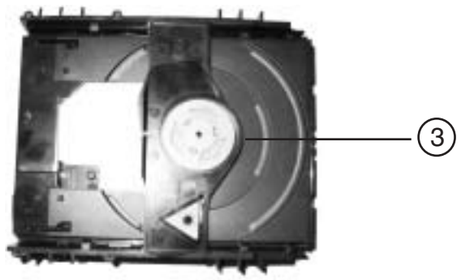

Without DVD Drive

MECHANICAL / ELECTRICAL PARTS LIST - DVD MODULE

1	9965 000 13082	SERVO PC BOARD ASSEMBLY
2	9965 000 13083	DVD DRIVE MECHANISM
3	9965 000 13084	LOADER MECHANISM *(without Servo Board and DVD Drive mechanism)*
c	9965 000 13085	TRAY
f	9965 000 13086	BELT
j	9965 000 13087	SWITCH LEVER
p	9965 000 13088	SPACER MECHA (SUSPENSION)
d+e	9965 000 13089	MOTOR W/PULLEY ASSEMBLY
	9965 000 12822	COMPLETE DVD MODULE *(with Servo Board and DVD Drive mechanism)*

Note: Only the parts mentioned in this list are normal service spare parts.

DVD LOADER KIT772SI

It is not recommended for component repair on this Module but to replace the major assembly when it becomes defective. Therefore limited service parts list are published in this chapter.

The Circuit & Layout diagrams are published for reference only. The repair assistance on DVD section is given on Chapter 2.

TABLE OF CONTENTS

Wiring Connection 7-1
Schematic Diagram (Top Left) 7-2
Schematic Diagram (Top Right) 7-3
Schematic Diagram (Bottom Left) 7-4
Schematic Diagram (Bottom Right) 7-5
Layout Diagram (Side A and B)..... ..7-6
Explorer View (DVD Loader).....7-7
Mechanical Part list.....7-8

WIRING CONNECTION

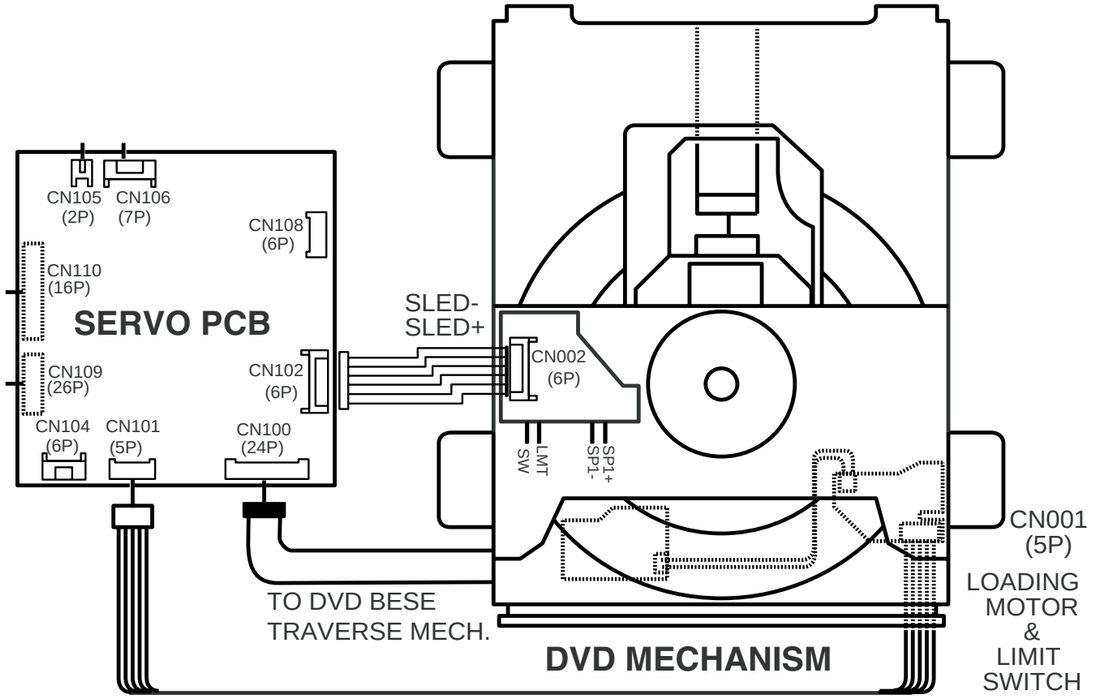

SCHEMATIC DIAGRAM (TOP LEFT) - SERVO BOARD

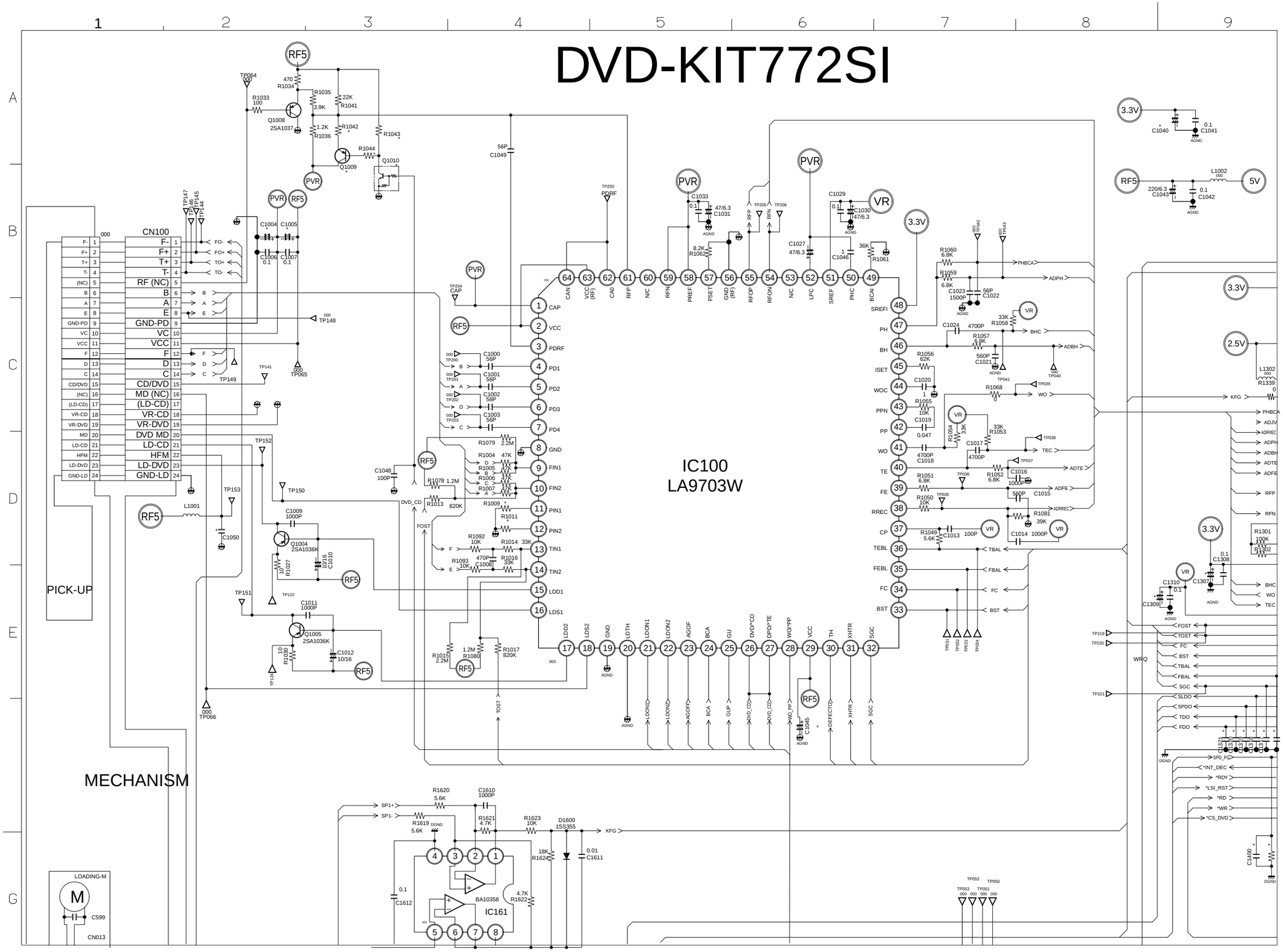

7A-3

SCHEMATIC DIAGRAM (TOP RIGHT) - SERVO BOARD

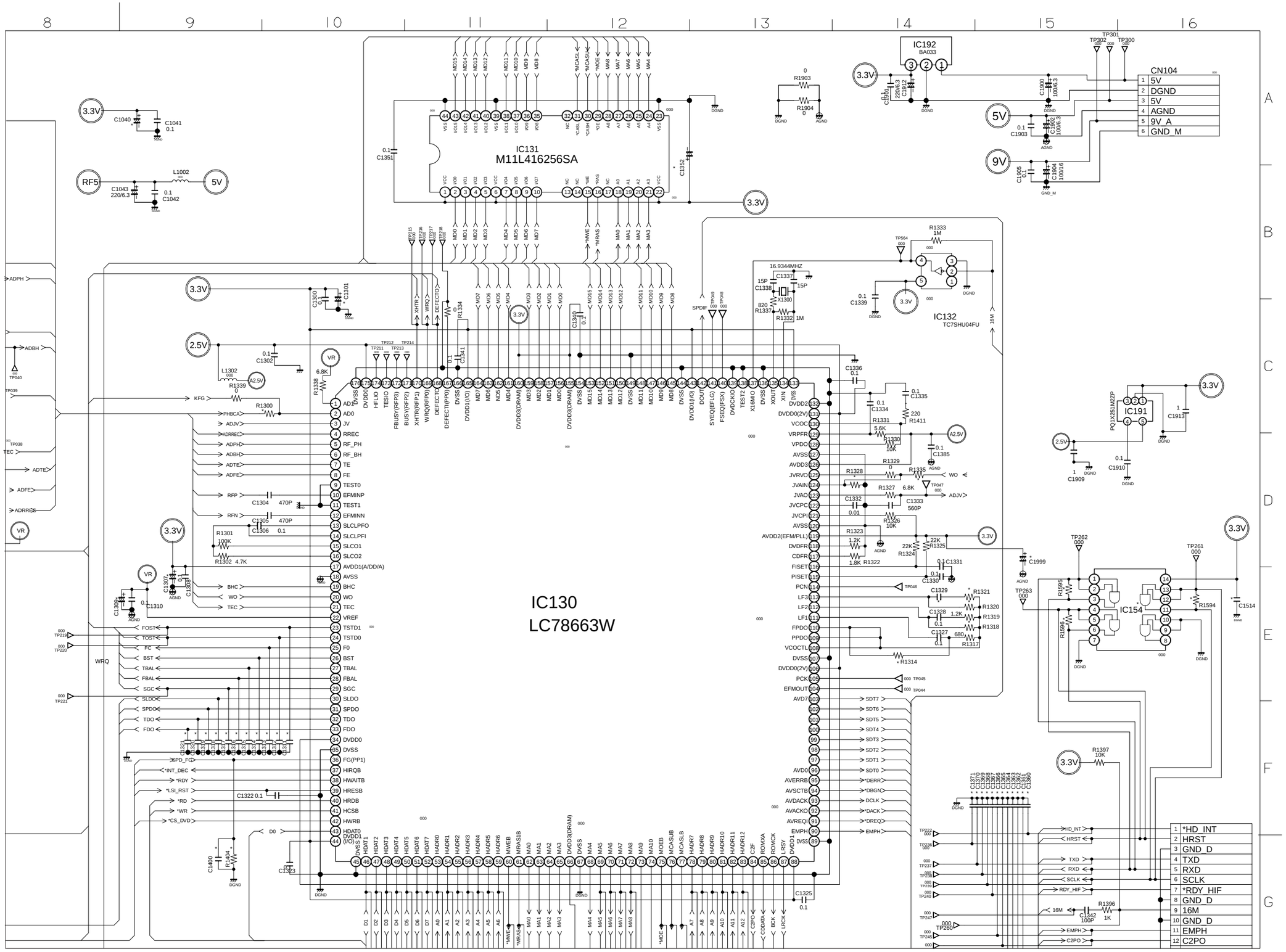

7A-4

SCHEMATIC DIAGRAM (BOTTOM LEFT) - SERVO BOARD

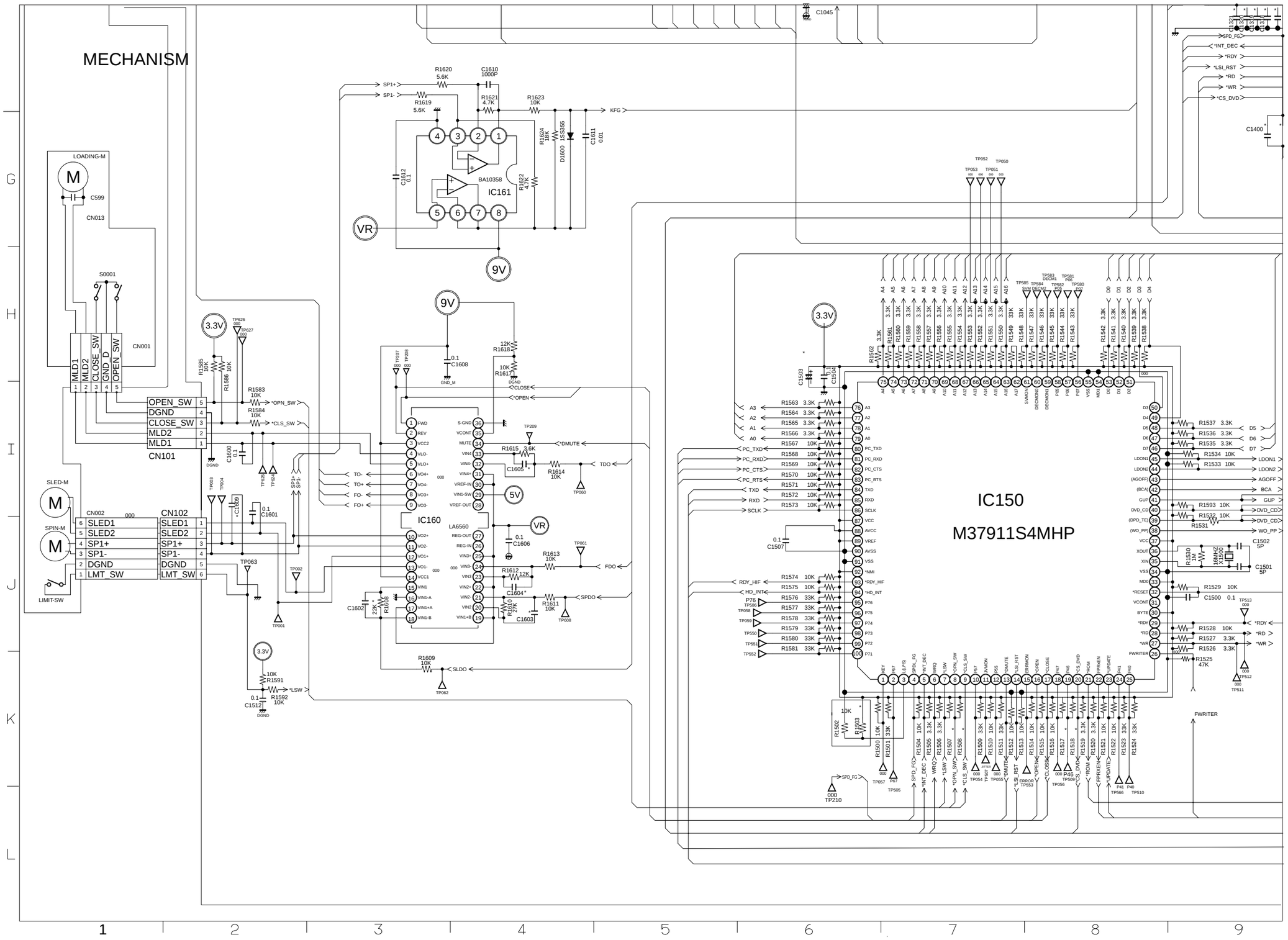

SCHEMATIC DIAGRAM (BOTTOM RIGHT) - SERVO BOARD

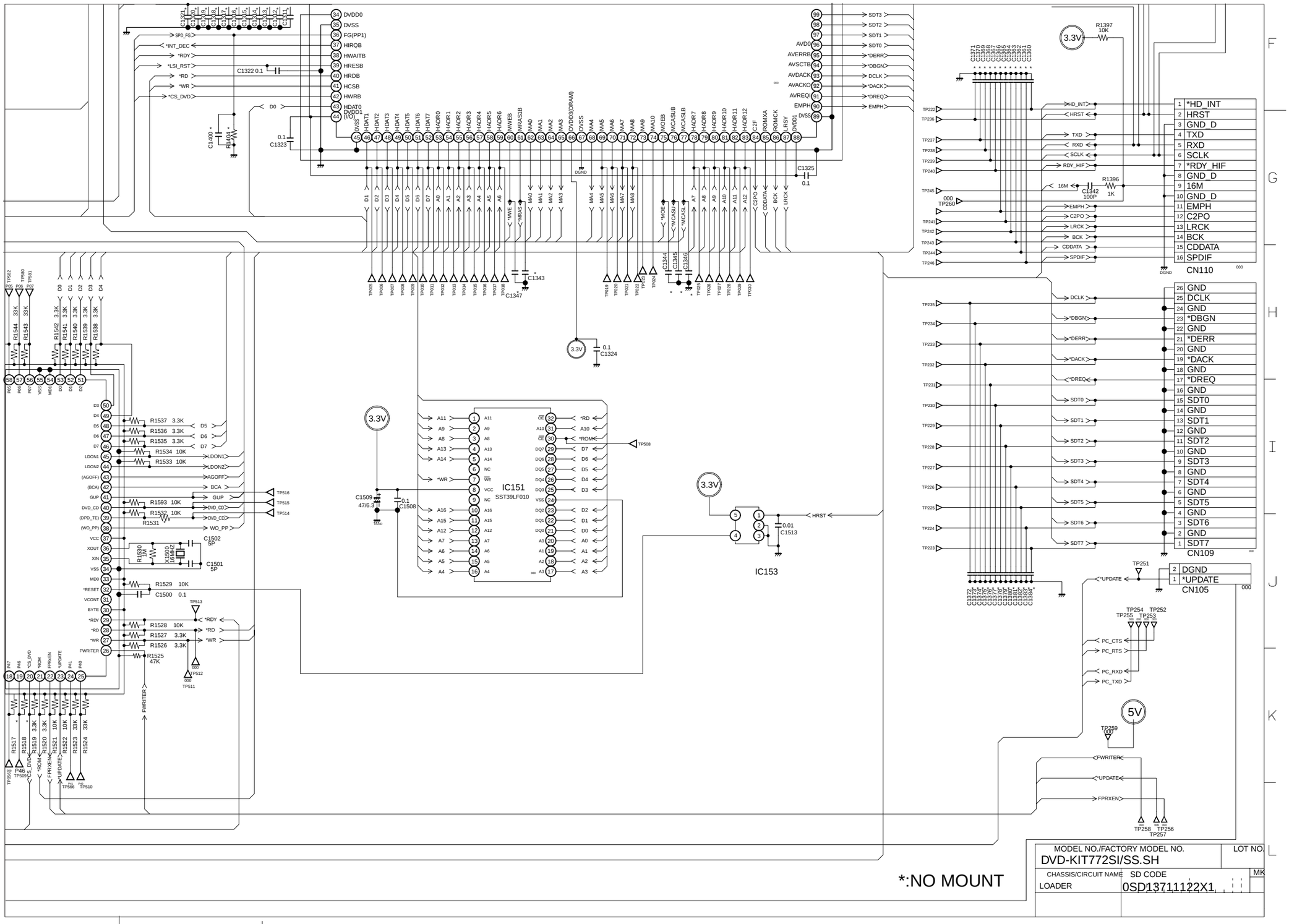

LAYOUT DIAGRAM (DVD SIDE A)

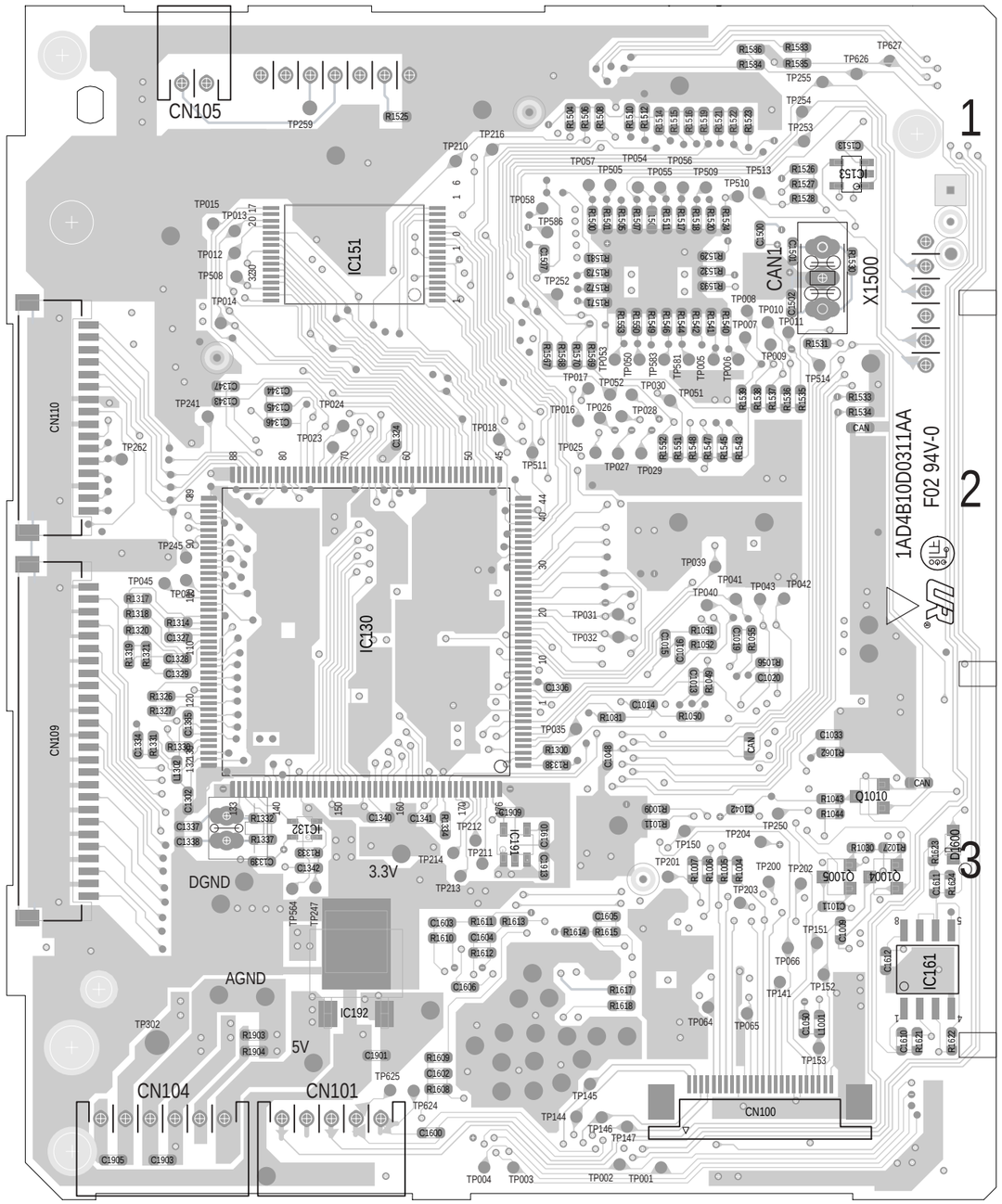

LAYOUT DIAGRAM (DVD SIDE B)

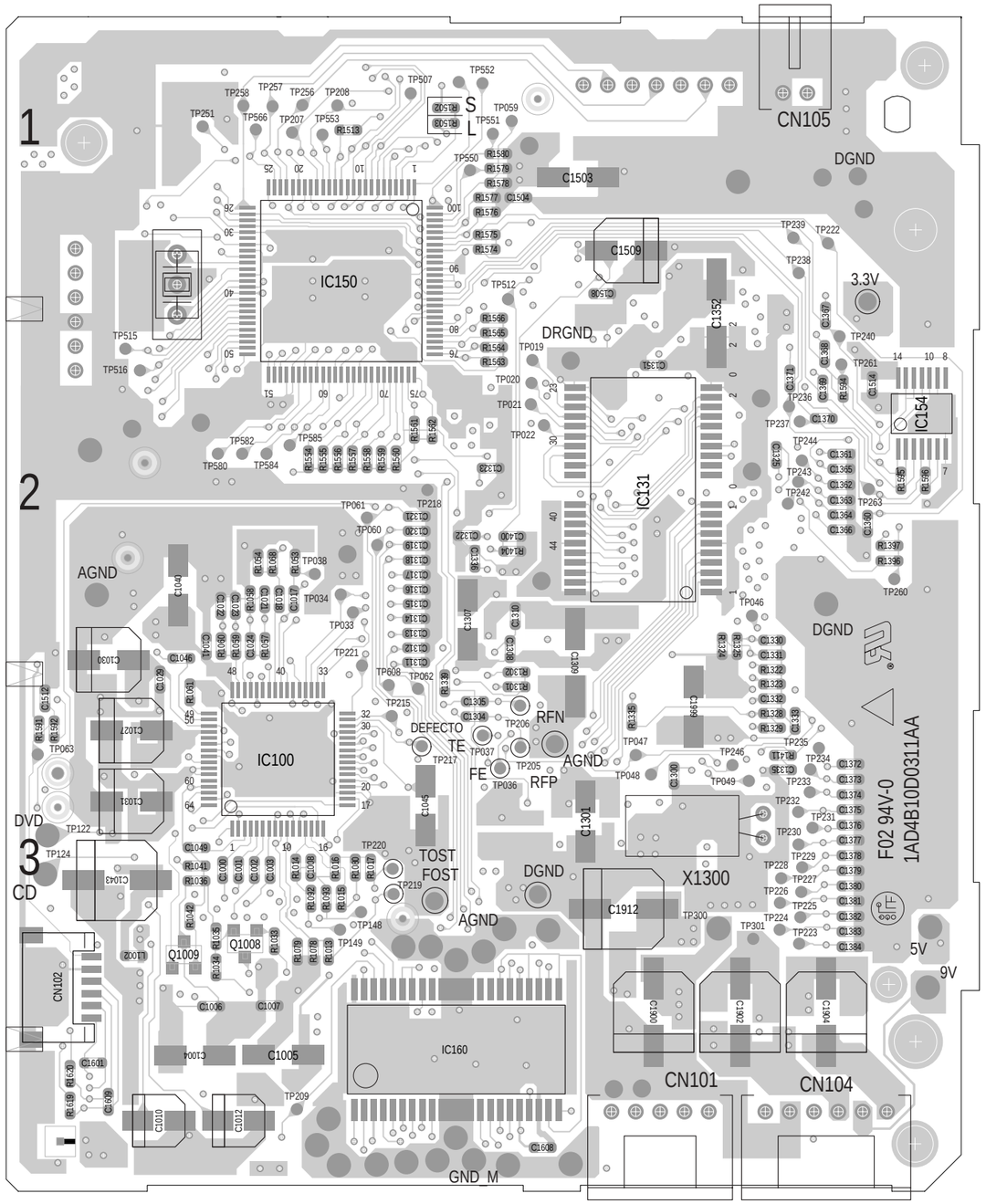

Exploded View - DVD Loader

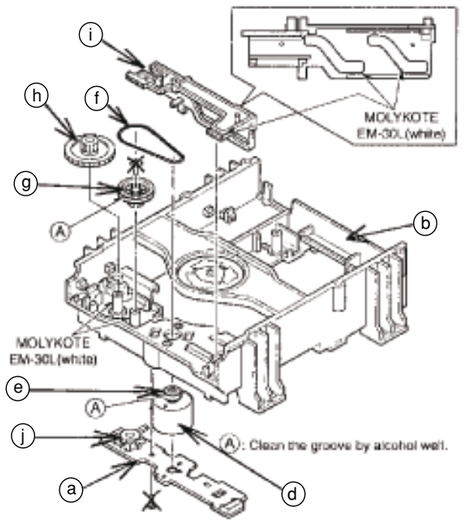

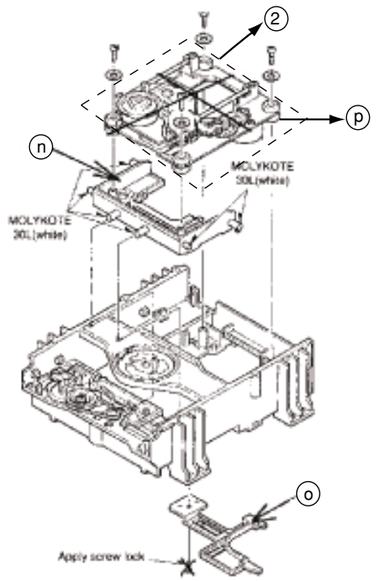

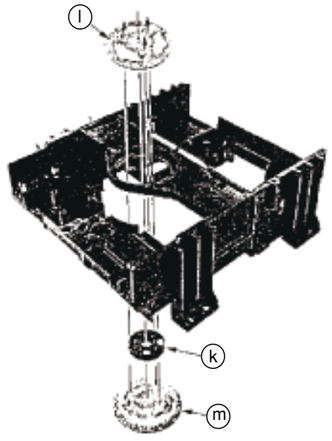

Tray parts.

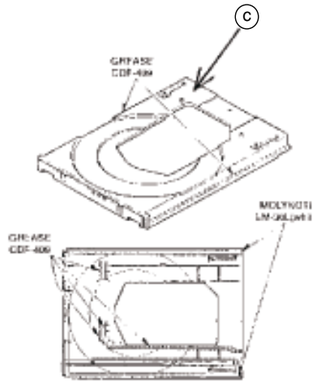

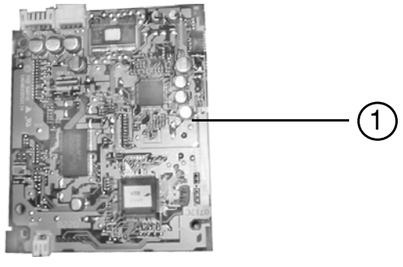

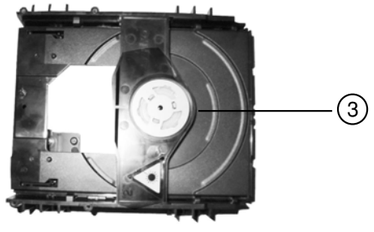

Without DVD Drive

MECHANICAL / ELECTRICAL PARTS LIST - DVD MODULE

1	9965 000 16291	SERVO PC BOARD ASSEMBLY
2	9965 000 16292	DVD DRIVE MECHANISM
3	9965 000 16293	LOADER MECHANISM *(without Servo Board and DVD Drive mechanism)*
c	9965 000 13085	TRAY
f	9965 000 13086	BELT
j	9965 000 13087	SWITCH LEVER
p	9965 000 13088	SPACER MECHA (SUSPENSION)
d+e	9965 000 13089	MOTOR W/PULLEY ASSEMBLY
	9965 000 15489	Complete DVD MODULE KIT772SI *(with Servo Board and DVD Drive mechanism)*

Note: Only the parts mentioned in this list are normal service spare parts.

MAIN BOARD

TABLE OF CONTENTS

Internal IC Diagram 8-1
Circuit Diagram (Top Left) 8-2
Circuit Diagram (Top Right)..... 8-3
Circuit Diagram (Bottom Left) 8-4
Circuit Diagram (Bottom Right) 8-5
PCB Layout(Component View) 8-6
PCB Layout(Copperside View)..... 8-7
Electrical Parts list 8-8

6018/6028 INTERNAL IC DIAGRAM

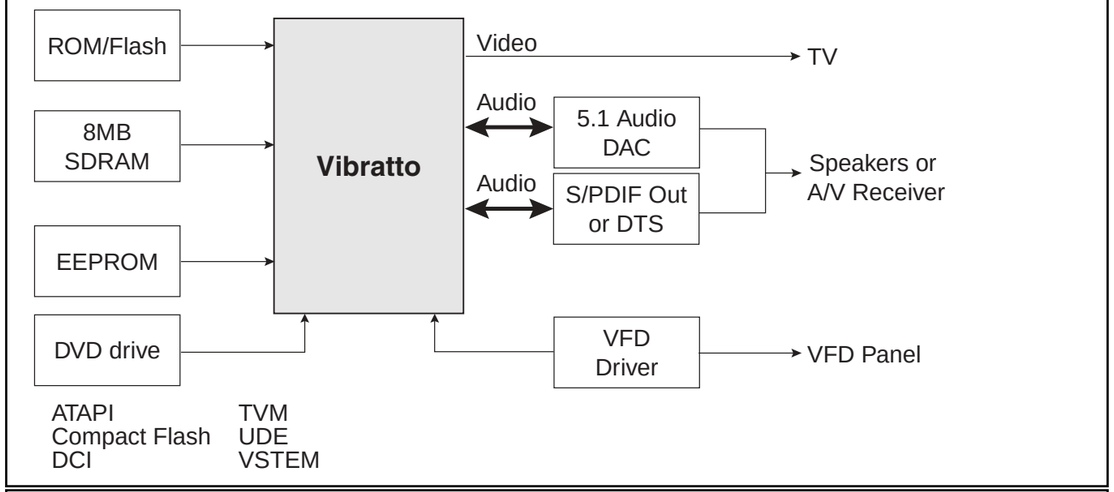

TDA7265 INTERNAL IC DIAGRAM

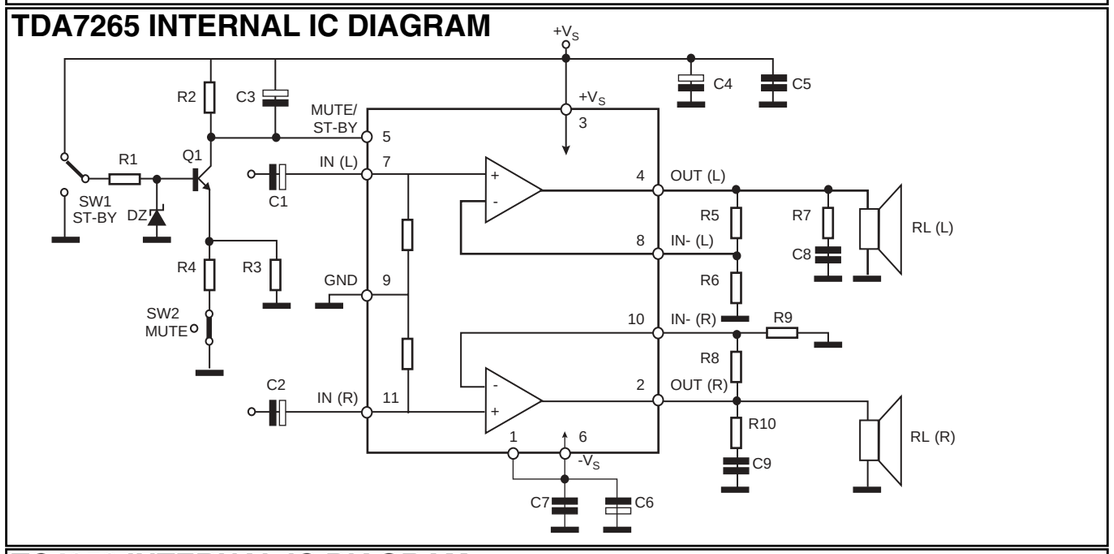

TC4053 INTERNAL IC DIAGRAM

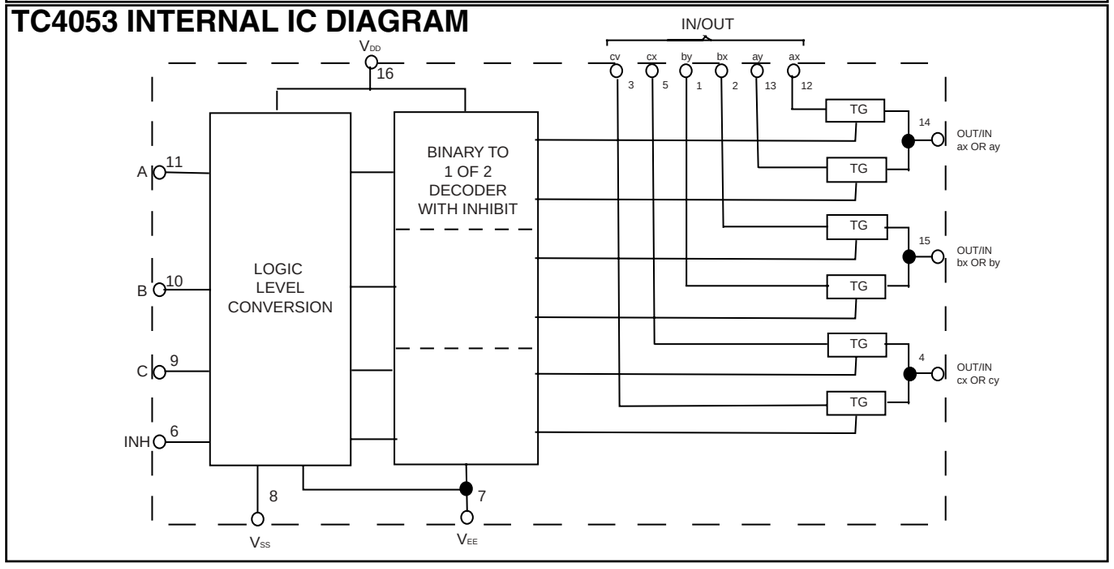

8-2

CIRCUIT DIAGRAM (Top Left)

C401	D1	C418	D4	C435	A2	C452	B4	C471	B6	C488	A7	C507	B9	C525	B11	C924	C11	C4001	C1	CN501	B11	D902	D11	IC406	A3	IC902	C10	Q405	C3	RB900	C9	R412	C2
C402	D1	C419	D4	C436	A2	C453	B3	C472	C7	C489	A6	C508	A8	C901	A10	C925	C11	C4004	C3	CN903	C12	D910	A10	IC407A	B3	IC903	D10	Q501	B11	ZD401	Z4	R413	C2
C403	D1	C420	B1	C437	B3	C454	B3	C473	C7	C490	A7	C509	A8	C902	A10	C926	C11	C4005	C4	CN904	D12	D911	D11	IC407B	B3	IC904	D10	Q502	B10	ZD402	A4	R414	C2
C404	D1	C421	B1	C438	A3	C455	B4	C474	B6	C491	A7	C510	A9	C903	A10	C927	C10	C4007	C4	CN905	C12	D912	A9	IC408	A5	JK105	D1	Q503	B10	ZD403	A4	R415	C2
C405	C1	C422	B1	C439	A4	C456	B4	C475	B6	C492	A7	C511	A9	C904	A10	C928	C10	C4008	C4	D401	D2	D913	D7	IC409A	B7	JK106	D1	Q504	B9	ZD404	A5	R416	C2
C406	C1	C423	B2	C440	A4	C457	B5	C476	B6	C493	A6	C512	B10	C905	A9	C929	C10	C4009	C4	D501	B9	D914	A11	IC409B	B7	JK401	D1	Q505	B10	ZD901	C10	R417	D3
C407	C1	C424	B1	C441	A4	C458	B5	C477	B7	C494	A7	C513	B10	C906	A9	C930	C9	C4011	D7	D502	B8	F901	A10	IC410A	A7	JK402	C1	Q901	D11	R401	D1	R418	D3
C408	D3	C425	B1	C442	A4	C459	A5	C478	B7	C495	A7	C514	B10	C907	A11	C931	D10	C4012	D7	D503	B10	F902	A10	IC410B	B7	JK501	B12	Q902	D11	R402	D1	R419	D3
C409	D3	C426	B1	C443	A3	C460	A5	C479	B6	C496	A7	C515	B10	C910	C10	C932	D9	C4013	D7	D504	B10	F903	D12	IC411A	A7	L501	B10	Q903	D10	R403	D1	R420	D4
C410	D3	C427	A1	C444	A3	C461	A4	C480	B6	C498	D1	C516	B10	C911	C10	C933	D9	C4014	D7	D507	A8	IC401	D3	IC411B	A7	L502	B10	Q910	D11	R404	D1	R421	D4
C411	D3	C428	A1	C445	A3	C463	A5	C481	B6	C499	D1	C517	B10	C912	C10	C937	C10	C4015	D7	D508	B10	IC402A	D4	IC412A	B5	L503	B10	Q911	D11	R405	D1	R422	D4
C412	D3	C429	A1	C446	A3	C465	A5	C482	B7	C501	B8	C518	B10	C913	C10	C938	D10	C4016	D7	D509	B10	IC402B	D4	IC412B	B5	L505	B10	Q912	D10	R406	D1	R423	D3
C413	D4	C430	A1	C447	B3	C466	A5	C483	B7	C502	B8	C519	B10	C914	C9	C940	D10	C4030	B5	D510	B10	IC403A	B1	IC413A	C3	Q913	A10	R407	C1	R424	D3
C414	D4	C431	A1	C448	B3	C467	A4	C484	B7	C503	B9	C520	B10	C915	C9	C941	D10	C4031	B5	D511	C7	IC403B	A1	IC501	C8	Q914	A10	R408	C1	R425	D4
C415	D4	C432	A1	C449	B3	C468	A4	C485	A6	C504	B9	C521	B11	C921	D12	C942	D9	C4032	B5	D512	C6	IC404A	A1	IC502	B8	RB102	D6	R409	C1	R426	D4
C416	D3	C433	A1	C450	B4	C469	A4	C486	B7	C505	B8	C523	A11	C922	C12	C943	D11	CN201	D7	D513	D6	IC404B	A2	IC503	A8	RB104	C1	R410	C1				
C417	D4	C434	A1	C451	B1	C470	A6	C487	B7	C506	B9	C524	B10	C923	D11	C944	A11	CN301	D8	D901	A10	IC405	B3	IC901	C10	Q404	D1	RB501	B12	R411	C2		

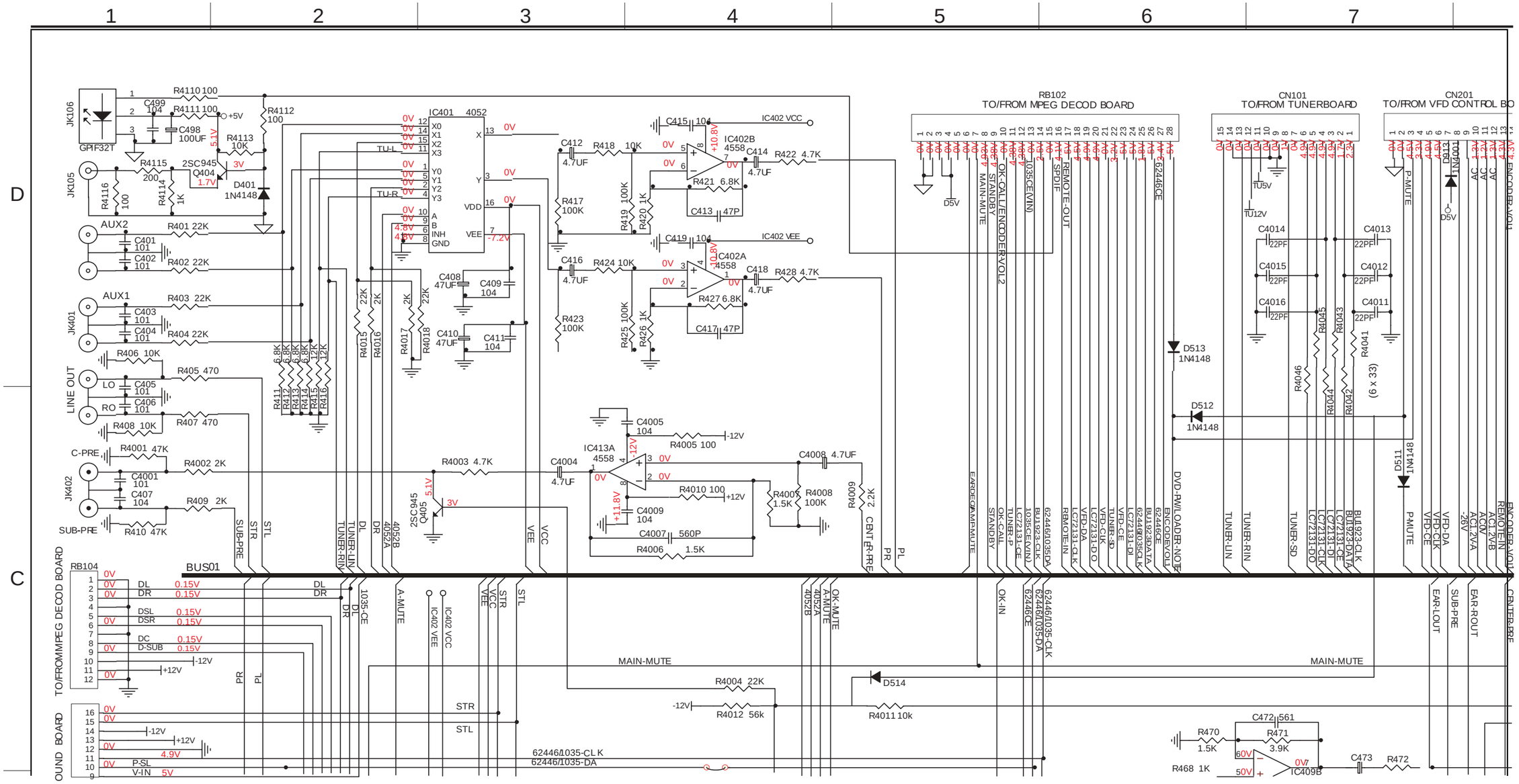

8-3

CIRCUIT DIAGRAM (Top Right)

R427 D4	R442 B3	R457 A4	R474 B6	R489 B7	R505 B8	R520 B10	R904 C11	R919 A10	R4010 C4	R4046 D7
R428 D4	R443 B3	R458 A4	R475 B6	R490 B7	R506 B8	R522 B11	R905 D11	R920 A11	R4011 C5	R4100 A6
R429 B1	R444 B4	R459 A4	R476 B6	R491 A7	R507 B8	R523 B10	R906 C11	R925 D11	R4012 C4	R4101 A7
R430 B1	R445 B4	R460 A4	R477 B7	R492 A6	R508 B8	R524 A10	R907 D11	R926 D12	R4015 D2	R4102 A7
R431 B1	R446 B4	R461 B5	R478 B7	R493 A6	R509 B8	R525 B10	R908 C10	R927 D12	R4016 D2	R4103 A7
R432 B1	R447 B3	R462 B5	R479 B7	R494 A6	R510 B8	R526 B10	R909 D10	R928 A9	R4017 D2	R4104 A7
R433 B1	R448 B3	R463 B5	R480 B6	R495 A7	R511 A8	R527 B10	R910 D11	R4001 C1	R4018 D3	R4105 B7
R434 B2	R449 B4	R464 B5	R481 B6	R496 A7	R512 A8	R528 B10	R911 D11	R4002 C1	R4030 B5	R4106 B7
R435 A1	R450 B4	R466 A5	R482 B6	R497 A7	R513 A8	R529 B10	R912 D11	R4003 C3	R4031 B5	R4110 D1
R436 A1	R451 A4	R467 A5	R483 B7	R498 A6	R514 A8	R530 A9	R913 D11	R4004 C4	R4032 B5	R4111 D1
R437 A1	R452 A4	R468 B6	R484 B7	R499 A6	R515 A8	R531 B10	R914 D10	R4005 C4	R4041 D7	R4112 D2
R438 A1	R453 B3	R469 B6	R485 B7	R501 B8	R516 B10	R532 A11	R915 D10	R4006 C4	R4042 C7	R4113 D2
R439 B4	R454 B3	R471 C7	R486 A6	R502 B8	R517 B10	R901 C10	R916 A10	R4007 C4	R4043 D7	R4114 D1
R440 B4	R455 A4	R472 C7	R487 A6	R503 B8	R518 B10	R902 C10	R917 A10	R4008 C4	R4044 C7	R4115 D1
R441 B3	R456 A4	R473 B7	R488 B6	R504 B8	R519 B10	R903 C11	R918 A10	R4009 C5	R4045 D7	R4116 D1

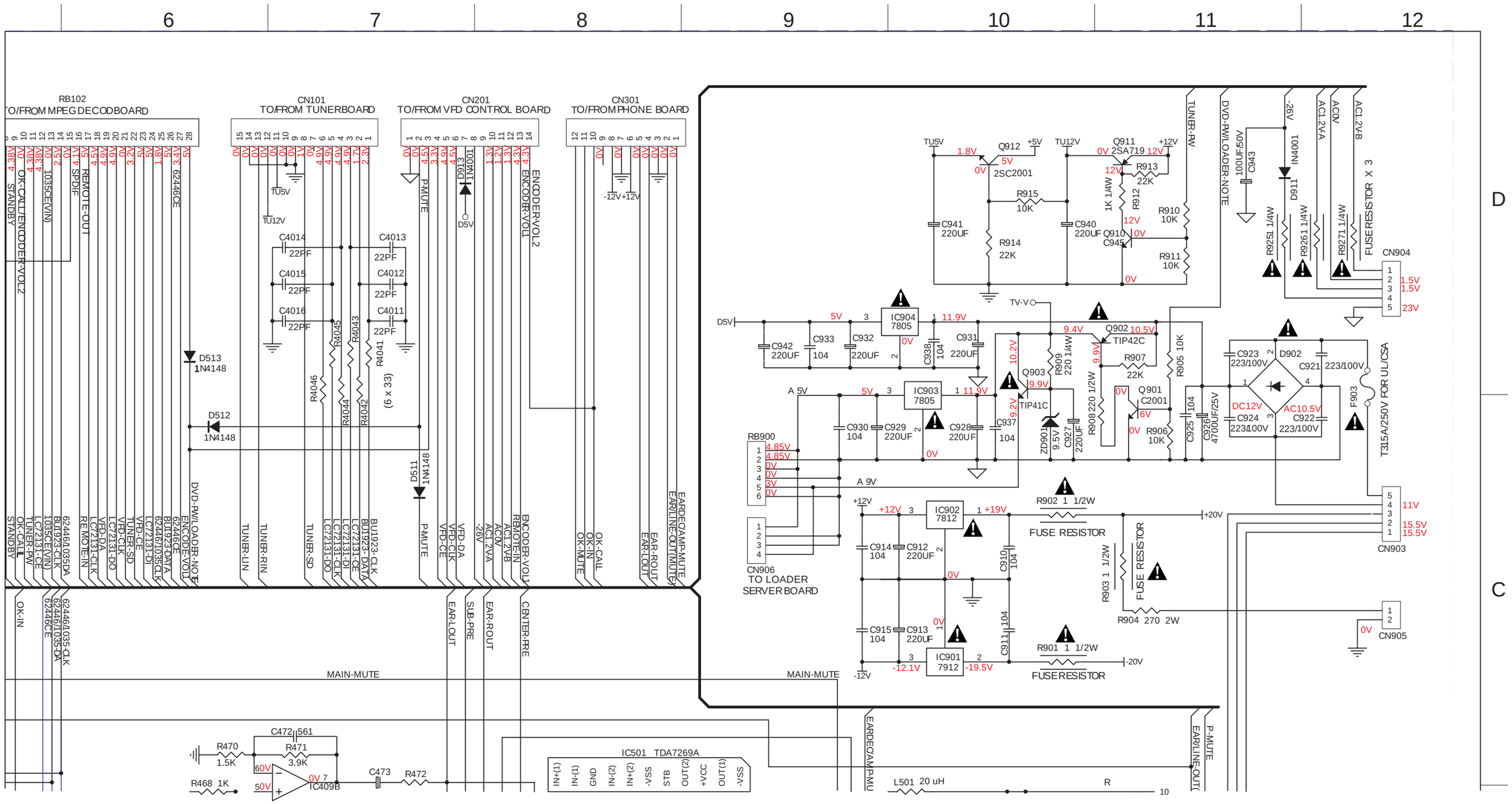

8-4

CIRCUIT DIAGRAM (Bottom Left)

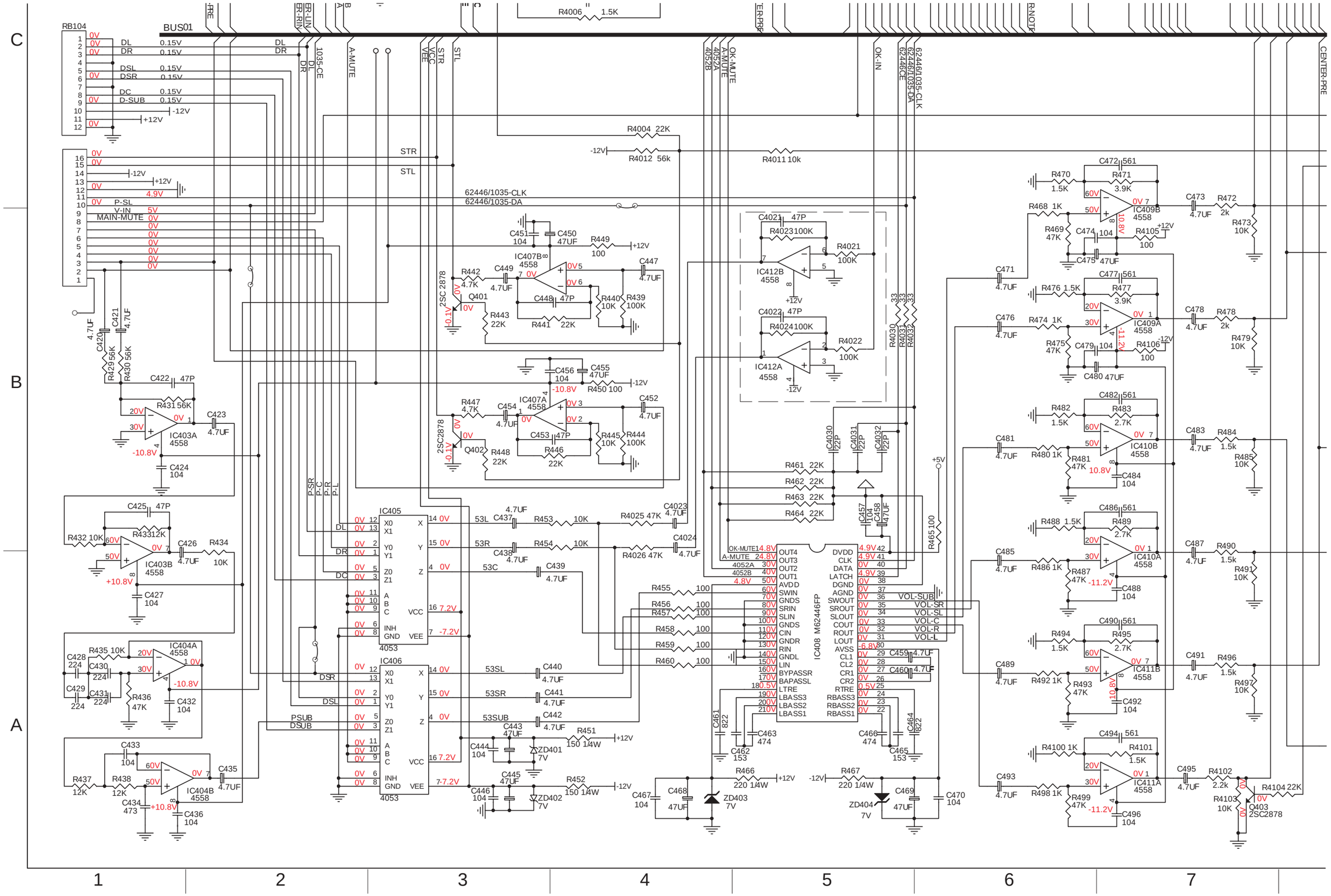

8-5

CIRCUIT DIAGRAM (Bottom Right)

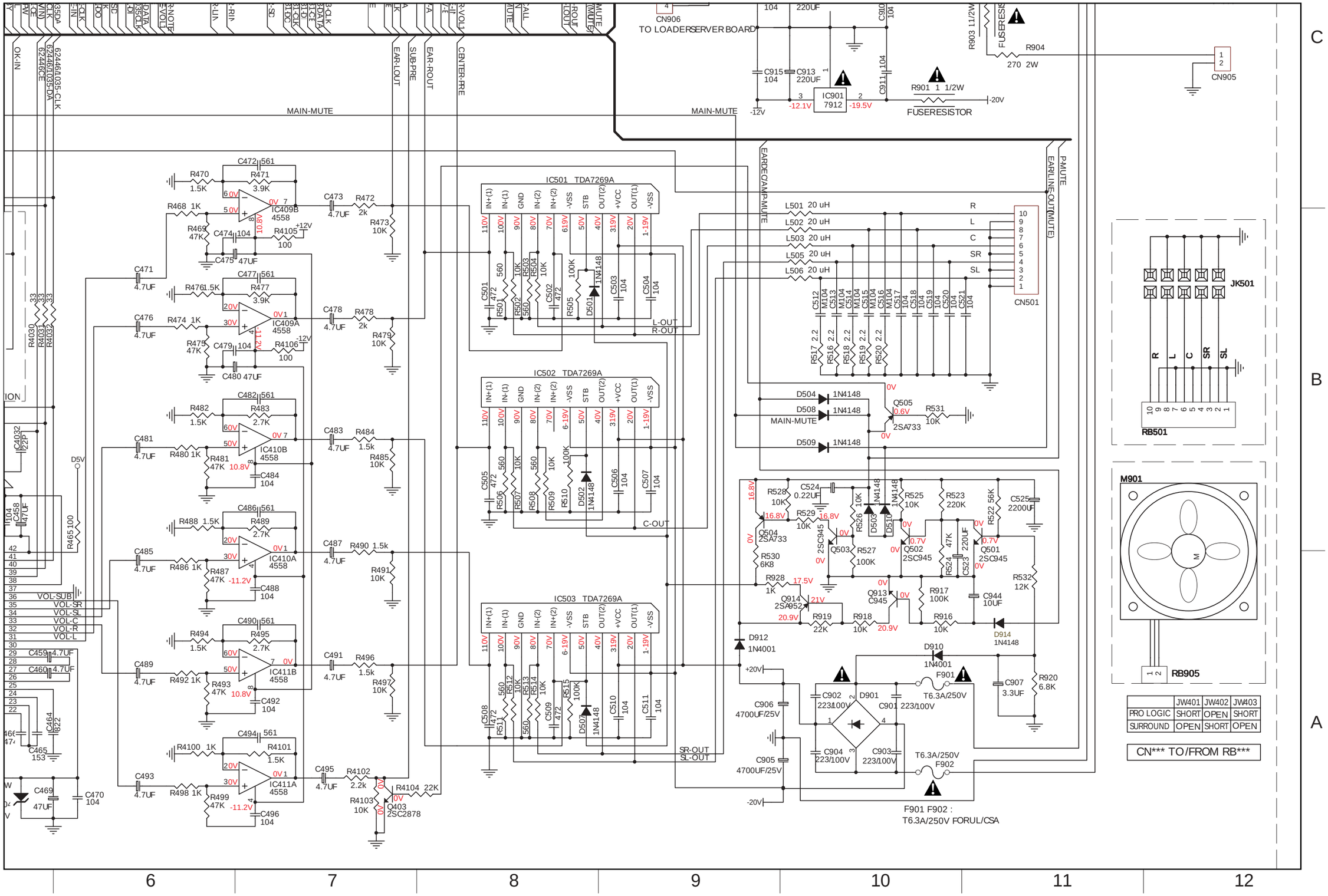

	JW401	JW402	JW403
PRO LOGIC	SHORT	OPEN	SHORT
SURROUND	OPEN	SHORT	OPEN

CN*** TO/FROM RB***

8-6

PCB LAYOUT (COMPONENT VIEW)

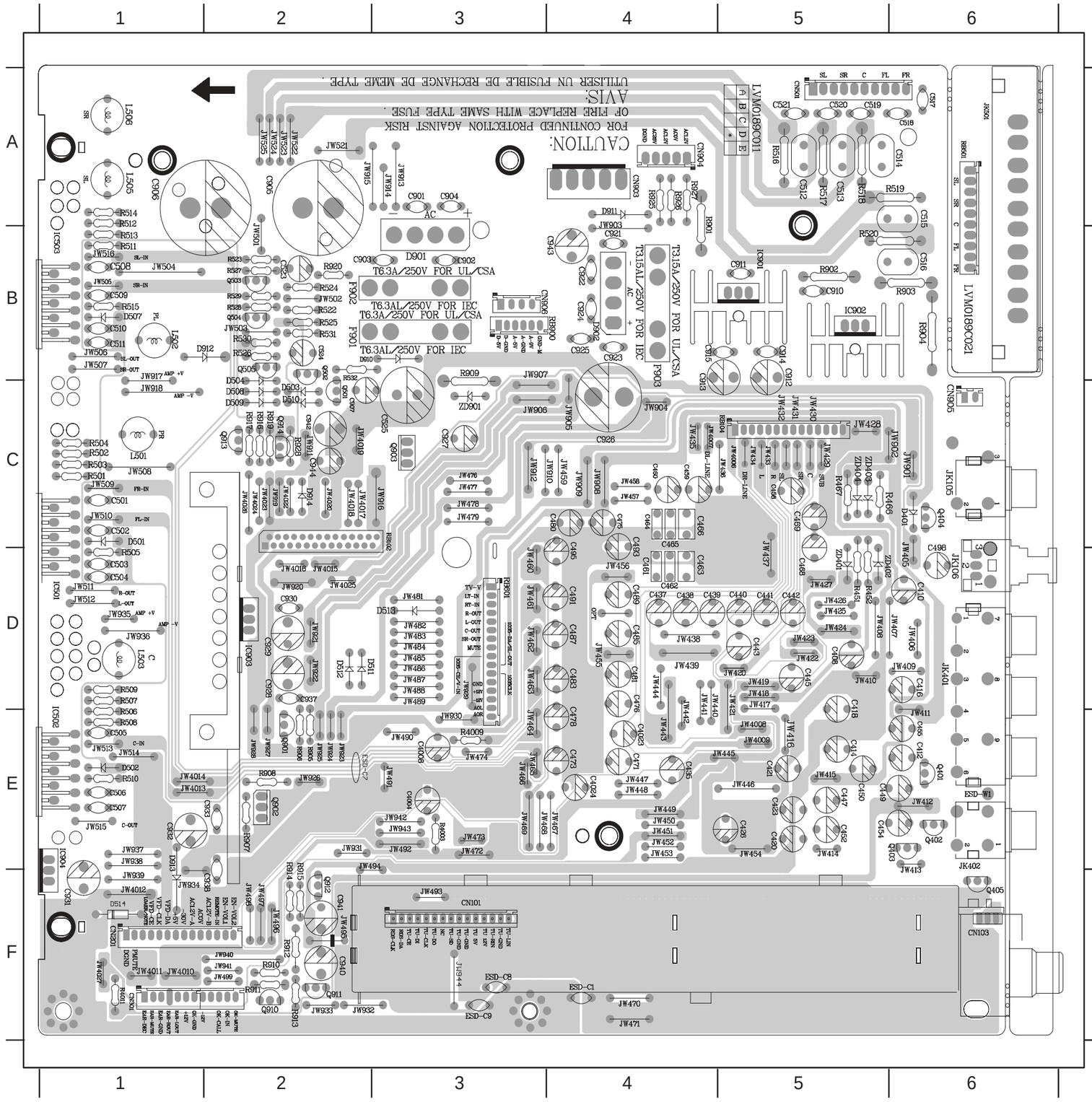

C408	D5	C520	A5	F901	B3	JW460	D3	JW4006	C5	R524	B2
C410	D6	C521	A5	F902	B3	JW461	D3	JW4007	C4	R525	B2
C412	E6	C523	B2	F903	B4	JW462	D3	JW4008	E5	R526	B2
C414	E5	C524	B2	IC501	D1	JW463	D3	JW4009	E5	R527	B2
C416	D6	C525	C3	IC502	E1	JW464	E3	JW4010	F1	R528	B2
C418	E5	C901	A3	IC503	B1	JW465	E3	JW4011	F1	R466	C6
C420	E5	C902	B3	IC901	B5	JW466	E3	JW4012	F1	R529	B2
C421	E5	C903	B3	IC902	B5	JW467	E4	JW4013	E1	R530	B2
C423	E5	C904	A3	IC903	D2	JW468	E4	JW4014	E1	R531	B2
C426	E5	C905	A2	IC904	E1	JW469	E3	JW4015	D2	R532	B2
C435	E4	C906	A1	JK105	C6	JW470	F4	JW4016	D2	R901	A4
C437	D4	C907	C2	JK106	D6	JW471	F4	JW4017	C2	R902	B5
C438	D4	C910	B5	JK401	D6	JW472	E3	JW4018	C2	R903	B6
C439	D4	C911	B5	JK402	E6	JW473	E3	JW4019	C2	R904	B6
C440	D5	C912	B6	JK501	A6	JW474	E3	JW4020	C2	R905	E2
C441	D5	C913	B5	JW405	D6	JW476	C3	JW4022	C2	R906	E2
C442	D5	C914	B5	JW406	D6	JW477	C3	JW4023	C2	R907	E2
C443	D5	C915	B4	JW407	D6	JW478	C3	JW4024	C2	R908	E2
C445	D5	C921	B4	JW408	D5	JW479	C3	JW4025	D2	R909	C3
C447	E5	C922	B4	JW409	D6	JW481	D3	JW4026	C2	R910	F2
C449	E6	C923	B4	JW410	D5	JW482	D3	JW4027	F1	R911	F2
C450	E5	C924	B4	JW411	E6	JW483	D3	L501	C1	R912	F2
C452	E5	C925	B4	JW412	E6	JW484	D3	L502	B1	R913	F2
C454	E6	C926	C4	JW413	E6	JW485	D3	L503	D1	R914	F2
C455	E6	C927	C3	JW414	E5	JW486	D3	L505	A1	R915	F2
C458	C5	C928	D2	JW415	E5	JW487	D3	L506	A1	R916	C2
C459	C4	C929	D2	JW416	E5	JW488	D3	Q401	E6	R917	C2
C460	C4	C930	D2	JW417	E5	JW489	D3	Q402	E6	R918	C2
C461	D4	C931	F1	JW418	D5	JW490	E3	Q403	E6	R919	C2
C462	D4	C932	E1	JW419	D5	JW491	E3	Q404	C6	R920	B2
C463	D4	C933	E2	JW420	D5	JW492	E3	Q405	F6	R925	A4
C464	C4	C938	F2	JW421	D5	JW493	F3	Q501	C2	R926	A4
C465	C4	C937	D2	JW422	D5	JW494	F3	Q502	B2	R927	A4
C466	C4	C940	F2	JW423	D5	JW495	F2	Q503	B2	R928	C2
C468	D5	C941	F2	JW424	D5	JW496	F2	Q504	B2	R4003	E3
C469	C5	C942	C2	JW425	D5	JW497	F2	Q505	B2	R4009	E3
C471	E4	C943	B4	JW426	D5	JW498	F2	Q901	E2	R4011	F1
C473	E4	C944	C2	JW427	D5	JW499	F2	Q902	E2	RB501	A6
C475	C4	C4004	E3	JW428	C5	JW501	B2	Q903	C3	RB900	B3
C476	D4	C4008	E3	JW429	C5	JW502	B2	Q910	F2	ZD401	D5
C478	E4	CN201	F1	JW430	C5	JW503	B2	Q911	F2	ZD402	D5
C480	C4	CN301	F1	JW431	C5	JW504	B1	Q912	F2	ZD403	C5
C481	D4	CN501	A5	JW432	C5	JW505	B1	Q913	C2	ZD404	C5
C483	D4	CN903	A4	JW433	C5	JW506	B1	Q914	C2	ZD901	C3
C485	D4	CN904	A4	JW434	C5	JW507	B1	R451	D5		
C487	D4	CN905	C6	JW435	C4	JW508	C1	R452	D5		
C489	D4	D401	C6	JW436	C5	JW509	C1	R466	C5		
C491	D4	D501	C1	JW437	D5	JW510	C1	R467	C5		
C493	D4	D502	E1	JW438	D4	JW511	D1	R501	C1		
C495	D4	D503	C2	JW439	D4	JW512	D1	R502	C1		
C498	D6	D504	C2	JW440	D5	JW513	E1	R503	C1		
C501	C1	D507	B1	JW441	D4	JW514	E1	R504	C1		
C502	C1	D508	C2	JW442	E4	JW515	E1	R505	D1		
C503	D1	D509	C2	JW443	E4	JW516	B1	R506	E1		
C504	D1	D510	C2	JW444	D4	JW521	A2	R507	D1		
C505	E1	D511	D2	JW445	E5	JW522	A2	R508	E1		
C506	E1	D512	D2	JW446	E5	JW523	A2	R509	D1		
C507	E1	D513	D3	JW447	E4	JW524	A2	R510	E1		
C508	B1	D514	F1	JW448	E4	JW525	A2	R511	B1		
C509	B1	D901	B3	JW449	E4	JW901	C6	R512	A1		
C510	B1	D902	B4	JW450	E4	JW903	B4	R513	B1		
C511	B1	D910	B3	JW451	E4	JW904	C4	R514	A1		
C512	A5	D911	A4	JW452	E4	JW905	C4	R515	B1		
C513	A5	D912	B2	JW453	E4	JW906	C3	R516	A5		
C514	A6	D913	F1	JW454	E5	JW907	C3	R517	A5		
C515	A6	D914	C2	JW455	D4	JW908	C4	R518	A5		
C516	B6	ESD-C1	F4	JW456	D4	JW909	C4	R519	A6		
C517	A6	ESD-C7	E2	JW457	C4	JW910	C4	R520	B6		
C518	A6	ESD-C8	F3	JW458	C4	JW911	C2	R522	B2		
C519	A5	ESD-C9	F3	JW459	C4	JW912	C3	R523	B2		

8-7

PCB LAYOUT(COPPERSIDE VIEW)

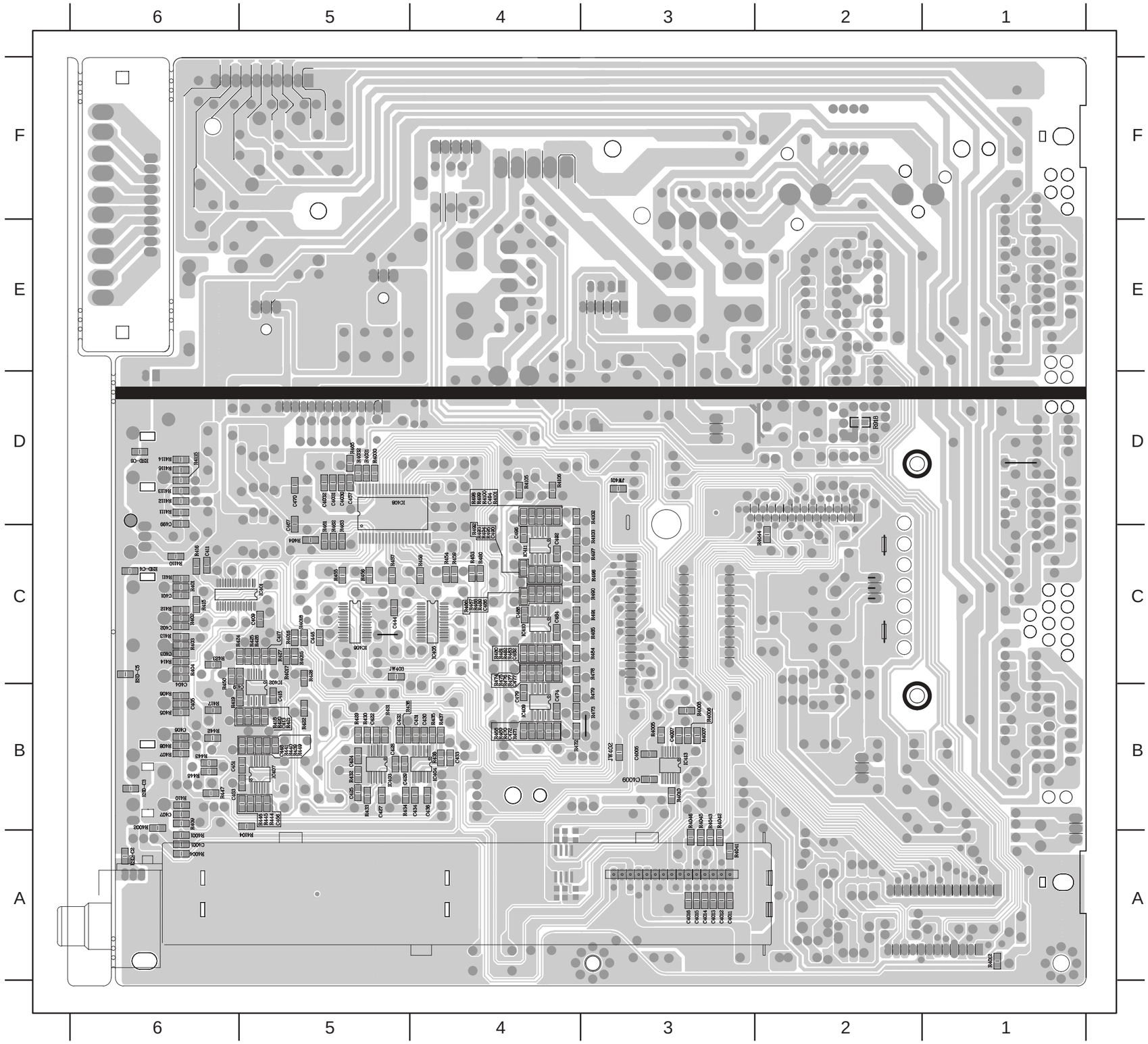

C401	C6	C4012	A3	R427	C5	R485	C3
C402	C6	C4013	A3	R428	C5	R486	C4
C403	C6	C4014	A3	R429	B5	R487	C4
C404	C6	C4015	A3	R430	B5	R488	C4
C405	B6	C4016	A3	R431	B5	R489	C4
C406	B6	C4030	D5	R432	B5	R490	C3
C407	B6	C4031	D5	R433	B5	R491	C3
C409	C5	C4032	D5	R434	B5	R492	C4
C411	C6	ESD-C2	A6	R435	B4	R493	C4
C413	B5	ESD-C3	B6	R436	B5	R494	C4
C415	B5	ESD-C4	C6	R437	B4	R495	C4
C417	C5	ESD-C5	C6	R438	B4	R496	C3
C419	C6	ESD-C6	D6	R439	B5	R497	C3
C422	B5	IC401	C5	R440	B5	R498	D4
C424	B5	IC402	B5	R441	B5	R499	D4
C425	B5	IC403	B5	R442	B6	R918	D2
C427	B5	IC404	B4	R443	B6	R4001	A6
C428	B5	IC405	C4	R444	B5	R4002	B6
C429	B5	IC406	C5	R445	B5	R4004	A6
C430	B4	IC407	B5	R446	B5	R4005	B3
C431	B4	IC408	D5	R447	B6	R4006	B3
C432	B5	IC409	B4	R448	B6	R4007	B3
C433	B4	IC410	C4	R449	B5	R4008	B3
C434	B4	IC411	C4	R450	C6	R4010	B3
C436	B4	IC413	B3	R453	C4	R4012	F1
C444	C5	JW402	B3	R454	C4	R4015	C5
C446	C5	R401	C6	R455	C5	R4016	C5
C448	B5	R402	C6	R456	C5	R4017	C5
C451	B6	R403	C6	R457	C5	R4018	C5
C453	B6	R404	C6	R458	C4	R4030	D5
C456	B5	R405	B6	R459	C4	R4031	D5
C457	D5	R406	B6	R460	C4	R4032	D5
C467	C5	R407	B6	R461	C5	R4041	A3
C470	D5	R408	B6	R463	C5	R4042	A3
C472	B4	R409	B6	R465	D5	R4043	A3
C474	B4	R410	B6	R468	B4	R4044	C2
C477	C4	R411	C6	R469	B4	R4045	A3
C479	B4	R412	C6	R470	B4	R4046	A3
C482	C4	R413	C6	R471	B4	R4100	D4
C484	C4	R414	C6	R472	B4	R4101	D4
C486	C4	R415	C6	R473	B3	R4102	D3
C488	C4	R416	C6	R474	C4	R4103	C3
C490	C4	R417	B6	R475	C4	R4104	B5
C492	C4	R418	B5	R476	C4	R4105	D4
C494	D4	R419	B6	R477	C4	R4106	D4
C496	C4	R420	B5	R478	C3	R4110	C6
C499	C6	R421	B5	R479	B3	R4111	D6
C4001	A6	R422	B5	R480	C4	R4112	D6
C4005	B3	R423	C6	R481	C4	R4113	D6
C4007	B3	R424	C6	R482	C4	R4114	D6
C4009	B3	R425	C5	R483	C4	R4115	D6
C4011	A3	R426	C5	R484	C3	R4116	D6

ELECTRICAL PARTS LIST - MAIN BOARD

MISCELLANEOUS

F901	9965 000 12501	⚠ FUSE T6,3A 250V SLOW	/37/37S
F901	4822 070 36302	⚠ FUSE T6,3A 250V SLOW	/21H/30S
F902	9965 000 12501	⚠ FUSE T6,3A 250V SLOW	/37/37S
F902	4822 070 36302	⚠ FUSE T6,3A 250V SLOW	/21H/30S
F903	9965 000 12637	⚠ FUSE TT3,15A 250V SLOW	/37/37S
F903	4822 070 33152	⚠ FUSE T6,3A 250V SLOW	/21H/30S
JK105	9965 000 12507	CINCH SOCKET 1P BLACK	
JK106	9965 000 12506	SOCKET OPTICAL OUT	
JK401	9965 000 12505	CINCH SOCKET 6P WHITE/RED	
JK402	9965 000 12504	CINCH SOCKET 2P WHITE/RED	
JK501	9965 000 12502	LOUDSPEAKER SOCKET 10P	
RB102	9965 000 12503	SOCKET FFC 28PIN VERT.	

CAPACITORS

C401	4822 126 13221	100PF 2% 63V
C402	4822 126 13221	100PF 2% 63V
C403	4822 126 13221	100PF 2% 63V
C405	4822 126 13221	100PF 2% 63V
C406	4822 126 13221	100PF 2% 63V
C407	4822 126 14585	100NF 10% 50V
C408	4822 124 40433	47UF 20% 25V
C409	4822 126 14585	100NF 10% 50V
C410	4822 124 40433	47UF 20% 25V
C411	4822 126 14585	100NF 10% 50V
C412	9965 000 12522	4,7UF 50V 20%
C413	4822 126 13692	47PF 1% 63V
C414	9965 000 12522	4,7UF 50V 20%
C415	4822 126 14585	100NF 10% 50V
C416	9965 000 12522	4,7UF 50V 20%
C417	4822 126 13692	47PF 1% 63V
C418	9965 000 12522	4,7UF 50V 20%
C419	4822 126 14585	100NF 10% 50V
C420	9965 000 12522	4,7UF 50V 20%
C421	9965 000 12522	4,7UF 50V 20%
C422	4822 126 13692	47PF 1% 63V
C423	9965 000 12522	4,7UF 50V 20%
C424	4822 126 14585	100NF 10% 50V
C425	4822 126 13692	47PF 1% 63V
C426	9965 000 12522	4,7UF 50V 20%
C427	4822 126 14585	100NF 10% 50V
C428	9965 000 12523	0,22UF 50V 20%
C429	9965 000 12523	0,22UF 50V 20%
C430	9965 000 12523	0,22UF 50V 20%
C431	9965 000 12523	0,22UF 50V 20%
C432	4822 126 14585	100NF 10% 50V
C433	4822 126 14585	100NF 10% 50V
C434	9965 000 12524	0,047UF 50V 20%
C435	9965 000 12522	4,7UF 50V 20%
C436	4822 126 14585	100NF 10% 50V
C437	9965 000 12522	4,7UF 50V 20%
C438	9965 000 12522	4,7UF 50V 20%
C439	9965 000 12522	4,7UF 50V 20%
C440	9965 000 12522	4,7UF 50V 20%
C441	9965 000 12522	4,7UF 50V 20%
C442	9965 000 12522	4,7UF 50V 20%
C443	4822 124 40433	47UF 20% 25V
C444	4822 126 14585	100NF 10% 50V
C445	4822 124 40433	47UF 20% 25V
C446	4822 126 14585	100NF 10% 50V
C447	9965 000 12522	4,7UF 50V 20%
C448	4822 126 13692	47PF 1% 63V
C449	9965 000 12522	4,7UF 50V 20%
C450	4822 124 40433	47UF 20% 25V
C451	4822 126 14585	100NF 10% 50V
C452	9965 000 12522	4,7UF 50V 20%
C453	4822 126 13692	47PF 1% 63V
C454	9965 000 12522	4,7UF 50V 20%
C455	4822 124 40433	47UF 20% 25V
C456	4822 126 14585	100NF 10% 50V
C457	4822 126 14585	100NF 10% 50V
C458	4822 124 40433	47UF 20% 25V
C459	9965 000 12522	4,7UF 50V 20%
C460	9965 000 12522	4,7UF 50V 20%
C461	9965 000 13068	0,0015UF 100V 5%
C462	9965 000 12526	0,015UF 100V 5%
C463	9965 000 12527	0,47UF 100V 5%
C464	9965 000 13068	0,0015UF 100V 5%
C465	9965 000 12526	0,015UF 100V 5%
C466	9965 000 12527	0,47UF 100V 5%
C467	4822 126 14585	100NF 10% 50V
C468	4822 124 40433	47UF 20% 25V
C469	4822 124 40433	47UF 20% 25V
C470	4822 126 14585	100NF 10% 50V
C471	9965 000 12522	4,7UF 50V 20%
C472	5322 116 80853	560PF 5% 63V
C473	9965 000 12522	4,7UF 50V 20%
C474	4822 126 14585	100NF 10% 50V
C475	4822 124 40433	47UF 20% 25V
C476	9965 000 12522	4,7UF 50V 20%
C477	5322 116 80853	560PF 5% 63V
C478	9965 000 12522	4,7UF 50V 20%
C479	4822 126 14585	100NF 10% 50V
C480	4822 124 40433	47UF 20% 25V
C481	9965 000 12522	4,7UF 50V 20%
C482	5322 116 80853	560PF 5% 63V
C483	9965 000 12522	4,7UF 50V 20%
C484	4822 126 14585	100NF 10% 50V
C485	9965 000 12522	4,7UF 50V 20%
C486	5322 116 80853	560PF 5% 63V
C487	9965 000 12522	4,7UF 50V 20%
C488	4822 126 14585	100NF 10% 50V
C489	9965 000 12522	4,7UF 50V 20%
C490	5322 116 80853	560PF 5% 63V
C491	9965 000 12522	4,7UF 50V 20%

8-8

ELECTRICAL PARTS LIST - MAIN BOARD

C492	4822 126 14585	100NF 10% 50V
C493	9965 000 12522	4,7UF 50V 20%
C494	5322 116 80853	560PF 5% 63V
C495	9965 000 12522	4,7UF 50V 20%
C496	4822 126 14585	100NF 10% 50V
C498	4822 124 40207	100UF 20% 25V
C499	9965 000 14655	0,068UF 50V 10%
C501	9965 000 12528	4700PF 50V 10%
C502	9965 000 12528	4700PF 50V 10%
C503	9965 000 12529	0,1UF 50V +80/-20%
C504	9965 000 12529	0,1UF 50V +80/-20%
C505	9965 000 12528	4700PF 50V 10%
C506	9965 000 12529	0,1UF 50V +80/-20%
C507	9965 000 12529	0,1UF 50V +80/-20%
C508	9965 000 12528	4700PF 50V 10%
C509	9965 000 12528	4700PF 50V 10%
C510	9965 000 12529	0,1UF 50V +80/-20%
C511	9965 000 12529	0,1UF 50V +80/-20%
C512	5322 121 42578	100NF 5% 250V
C513	5322 121 42578	100NF 5% 250V
C514	5322 121 42578	100NF 5% 250V
C515	5322 121 42578	100NF 5% 250V
C516	5322 121 42578	100NF 5% 250V
C517	9965 000 12529	0,1UF 50V +80/-20%
C518	9965 000 12529	0,1UF 50V +80/-20%
C519	9965 000 12529	0,1UF 50V +80/-20%
C520	9965 000 12529	0,1UF 50V +80/-20%
C521	9965 000 12529	0,1UF 50V +80/-20%
C523	9965 000 12558	220UF 16V 20%
C524	9965 000 13453	0,22UF 50V 20%
C525	9965 000 13069	2200UF 25V 20%
C901	9965 000 08286	0,022UF 100V 5%
C902	9965 000 08286	0,022UF 100V 5%
C903	9965 000 08286	0,022UF 100V 5%
C904	9965 000 08286	0,022UF 100V 5%
C905	9965 000 14656	⚠ 4700UF 25V 20%
C906	9965 000 14656	⚠ 4700UF 25V 20%
C907	9965 000 12532	3,3UF 50V 20%
C910	9965 000 12529	0,1UF 50V +80/-20%
C911	9965 000 12529	0,1UF 50V +80/-20%
C912	9965 000 12533	220UF 25V 20%
C913	9965 000 12533	220UF 25V 20%
C914	9965 000 12529	0,1UF 50V +80/-20%
C915	9965 000 12529	0,1UF 50V +80/-20%
C921	9965 000 08286	0,022UF 100V 5%
C922	9965 000 08286	0,022UF 100V 5%
C923	9965 000 08286	0,022UF 100V 5%
C924	9965 000 08286	0,022UF 100V 5%
C925	9965 000 12529	0,1UF 50V +80/-20%
C926	9965 000 14656	⚠ 4700UF 25V 20%
C927	9965 000 14139	10UF 50V 20%
C928	9965 000 12533	220UF 25V 20%
C929	9965 000 12533	220UF 25V 20%
C930	9965 000 12529	0,1UF 50V +80/-20%
C931	9965 000 12533	220UF 25V 20%
C932	9965 000 12533	220UF 25V 20%
C933	9965 000 12529	0,1UF 50V +80/-20%
C937	9965 000 12529	0,1UF 50V +80/-20%
C938	9965 000 12529	0,1UF 50V +80/-20%
C940	9965 000 12533	220UF 25V 20%
C941	9965 000 12533	220UF 25V 20%
C942	9965 000 12533	220UF 25V 20%
C943	9965 000 12536	100UF 50V 20%
C944	9965 000 14139	10UF 50V 20%
C4001	4822 126 13221	100PF 2% 63V
C4003	4822 124 40433	47UF 20% 25V
C4004	9965 000 12522	4,7UF 50V 20%
C4005	4822 126 14585	100NF 10% 50V
C4007	5322 116 80853	560PF 5% 63V
C4008	9965 000 12522	4,7UF 50V 20%
C4009	4822 126 14585	100NF 10% 50V
C4016	5322 122 32658	22PF 5% 50V
C4030	5322 122 32658	22PF 5% 50V
C4031	5322 122 32658	22PF 5% 50V
C4032	5322 122 32658	22PF 5% 50V
ESD-C1	9965 000 12529	0,1UF 50V +80/-20%
ESD-C2	9965 000 14826	0,068UF 50V 10%
ESD-C3	9965 000 14826	0,068UF 50V 10%
ESD-C4	9965 000 14826	0,068UF 50V 10%
ESD-C5	9965 000 14826	0,068UF 50V 10%
ESD-C6	9965 000 14826	0,068UF 50V 10%
ESD-C7	9965 000 13094	0,068UF 50V 10%
ESD-C8	9965 000 13094	0,068UF 50V 10%
ESD-C9	9965 000 13094	0,068UF 50V 10%

RESISTORS

R401	9965 000 12482	47K 1/10W 5%
R402	9965 000 12482	47K 1/10W 5%
R403	9965 000 12482	47K 1/10W 5%
R404	9965 000 12482	47K 1/10W 5%
R405	4822 051 20471	470R 5% 0,1W
R406	9965 000 12484	10K 1/10W 5%
R407	4822 051 20471	470R 5% 0,1W
R408	9965 000 12484	10K 1/10W 5%
R409	4822 051 20202	2K 5% 0,1W
R410	9965 000 12482	47K 1/10W 5%
R411	4822 051 20472	4K7 5% 0,1W
R412	4822 051 20472	4K7 5% 0,1W
R413	4822 051 20472	4K7 5% 0,1W
R414	4822 051 20472	4K7 5% 0,1W
R415	4822 051 20472	4K7 5% 0,1W
R416	4822 051 20472	4K7 5% 0,1W
R417	4822 117 10837	100K 1% 0,1W
R418	9965 000 12484	10K 1/10W 5%

ELECTRICAL PARTS LIST - MAIN BOARD

RESISTORS

R419	4822 117 10837	100K 1% 0,1W
R420	4822 051 20102	1K 5% 0,1W
R421	9965 000 12483	12K 1/10W 5%
R422	4822 051 20472	4K7 5% 0,1W
R423	4822 117 10837	100K 1% 0,1W
R424	9965 000 12484	10K 1/10W 5%
R425	4822 117 10837	100K 1% 0,1W
R426	4822 051 20102	1K 5% 0,1W
R427	9965 000 12483	12K 1/10W 5%
R428	4822 051 20472	4K7 5% 0,1W
R429	4822 117 11148	56K 1% 0,1W
R430	4822 117 11148	56K 1% 0,1W
R431	4822 117 11148	56K 1% 0,1W
R432	9965 000 12484	10K 1/10W 5%
R433	9965 000 12483	12K 1/10W 5%
R434	9965 000 12484	10K 1/10W 5%
R435	9965 000 12484	10K 1/10W 5%
R436	9965 000 12482	47K 1/10W 5%
R437	9965 000 12483	12K 1/10W 5%
R438	9965 000 12483	12K 1/10W 5%
R439	4822 117 10837	100K 1% 0,1W
R440	9965 000 12484	10K 1/10W 5%
R441	4822 051 20223	22K 5% 0,1W
R442	4822 051 20472	4K7 5% 0,1W
R443	4822 051 20223	22K 5% 0,1W
R445	9965 000 12484	10K 1/10W 5%
R446	4822 051 20223	22K 5% 0,1W
R447	4822 051 20472	4K7 5% 0,1W
R448	4822 051 20223	22K 5% 0,1W
R449	4822 117 11373	100R 1% 1/10W
R450	4822 117 11373	100R 1% 1/10W
R451	4822 116 83868	150R 5% 0,5W
R452	4822 116 83868	150R 5% 0,5W
R453	9965 000 12484	10K 1/10W 5%
R454	9965 000 12484	10K 1/10W 5%
R455	4822 117 11373	100R 1% 1/10W
R456	4822 117 11373	100R 1% 1/10W
R457	4822 117 11373	100R 1% 1/10W
R459	4822 117 11373	100R 1% 1/10W
R460	4822 117 11373	100R 1% 1/10W
R461	4822 051 20223	22K 5% 0,1W
R462	4822 051 20223	22K 5% 0,1W
R463	4822 051 20223	22K 5% 0,1W
R464	4822 051 20223	22K 5% 0,1W
R465	4822 117 11373	100R 1% 1/10W
R466	4822 116 83872	220R 5% 0,5W
R467	4822 116 83872	220R 5% 0,5W
R468	4822 051 20102	1K 5% 0,1W
R469	9965 000 12482	47K 1/10W 5%
R470	4822 117 11139	1K5 1% 0,1W
R471	4822 051 20392	3K9 5% 0,1W
R472	4822 051 20202	2K 5% 0,1W
R473	9965 000 12484	10K 1/10W 5%
R474	4822 051 20102	1K 5% 0,1W
R475	9965 000 12482	47K 1/10W 5%
R476	4822 117 11139	1K5 1% 0,1W
R477	4822 051 20392	3K9 5% 0,1W
R478	4822 051 20202	2K 5% 0,1W
R479	9965 000 12484	10K 1/10W 5%
R480	4822 051 20102	1K 5% 0,1W
R481	9965 000 12482	47K 1/10W 5%
R482	4822 117 11139	1K5 1% 0,1W
R483	4822 117 12955	2K7 1% 0,1W
R484	4822 117 11139	1K5 1% 0,1W
R485	9965 000 12484	10K 1/10W 5%
R486	4822 051 20102	1K 5% 0,1W
R487	9965 000 12482	47K 1/10W 5%
R488	4822 117 11139	1K5 1% 0,1W
R489	4822 117 12955	2K7 1% 0,1W
R490	4822 117 11139	1K5 1% 0,1W
R491	9965 000 12484	10K 1/10W 5%
R492	4822 051 20102	1K 5% 0,1W
R493	9965 000 12482	47K 1/10W 5%
R494	4822 117 11139	1K5 1% 0,1W
R495	4822 117 12955	2K7 1% 0,1W
R496	4822 117 11139	1K5 1% 0,1W
R497	9965 000 12484	10K 1/10W 5%
R498	4822 051 20102	1K 5% 0,1W
R499	9965 000 12482	47K 1/10W 5%
R501	4822 050 25601	560R 1% 0,6W
R502	4822 050 21003	10K 1% 0,6W
R503	4822 050 25601	560R 1% 0,6W
R504	4822 050 21003	10K 1% 0,6W
R505	4822 050 21004	100K 1% 0,6W
R506	4822 050 25601	560R 1% 0,6W
R507	4822 050 21003	10K 1% 0,6W
R508	4822 050 25601	560R 1% 0,6W
R509	4822 050 21003	10K 1% 0,6W
R510	4822 050 21004	100K 1% 0,6W
R511	4822 050 25601	560R 1% 0,6W
R512	4822 050 21003	10K 1% 0,6W
R513	4822 050 25601	560R 1% 0,6W
R514	4822 050 21003	10K 1% 0,6W
R515	4822 050 21004	100K 1% 0,6W
R516	4822 116 81154	2R2 5% 0,5W
R517	4822 116 81154	2R2 5% 0,5W
R518	4822 116 81154	2R2 5% 0,5W
R519	4822 116 81154	2R2 5% 0,5W
R520	4822 116 81154	2R2 5% 0,5W
R522	9965 000 12560	56K 1/6W 5%
R523	9965 000 08284	220K 1/6W 5%
R524	4822 050 24703	47K 1% 0,6W
R525	4822 050 21003	10K 1% 0,6W
R526	4822 050 21003	10K 1% 0,6W

8-9

ELECTRICAL PARTS LIST - MAIN BOARD

R528	4822 050 21003	10K 1% 0,6W
R529	4822 050 21003	10K 1% 0,6W
R530	9965 000 12520	6,8K 1/6W 5%
R531	4822 050 21003	10K 1% 0,6W
R532	9965 000 12516	12K 1/6W 5%
R901	9965 000 12517 ⚠	1R 1/2W 5%
R902	9965 000 12517 ⚠	1R 1/2W 5%
R903	9965 000 12517 ⚠	1R 1/2W 5%
R904	9965 000 14657	270 2W 5% W/KINK
R905	4822 050 21003	10K 1% 0,6W
R906	4822 050 21003	10K 1% 0,6W
R907	4822 050 22203	22K 1% 0,6W
R908	4822 050 22201	220R 1% 0,6W
R909	4822 116 83872	220R 5% 0,5W
R910	4822 050 21003	10K 1% 0,6W
R911	4822 050 21003	10K 1% 0,6W
R912	4822 050 11002	1K 1% 0,4W
R913	4822 050 22203	22K 1% 0,6W
R914	4822 050 22203	22K 1% 0,6W
R915	4822 050 21003	10K 1% 0,6W
R916	4822 050 21003	10K 1% 0,6W
R917	4822 050 21004	100K 1% 0,6W
R918	9965 000 12484	10K 1/10W 5%
R919	4822 050 22203	22K 1% 0,6W
R920	9965 000 12520	6,8K 1/6W 5%
R925	9965 000 12521 ⚠	1R 1/4W 5%
R926	9965 000 12521 ⚠	1R 1/4W 5%
R927	9965 000 12521 ⚠	1R 1/4W 5%
R928	9965 000 12519	1K 1/6W 5%
R4001	9965 000 12482	47K 1/10W 5%
R4002	4822 051 20202	2K 5% 0,1W
R4003	4822 051 20472	4K7 5% 0,1W
R4004	4822 051 20223	22K 5% 0,1W
R4005	4822 117 11373	100R 1% 1/10W
R4006	4822 051 20008	0R JUMPER 0805
R4007	4822 117 11139	1K5 1% 0,1W
R4008	4822 117 10837	100K 1% 0,1W
R4009	9965 000 12515	2,2K 1/6W 5%
R4010	4822 117 11373	100R 1% 1/10W
R4011	4822 050 21003	10K 1% 0,6W
R4012	4822 117 11148	56K 1% 0,1W
R4015	4822 051 20223	22K 5% 0,1W
R4016	4822 051 20202	2K 5% 0,1W
R4017	4822 051 20202	2K 5% 0,1W
R4018	4822 051 20223	22K 5% 0,1W
R4030	2322 734 63309	33R 1% 1/10W
R4031	2322 734 63309	33R 1% 1/10W
R4032	2322 734 63309	33R 1% 1/10W
R4041	2322 734 63309	33R 1% 1/10W
R4042	2322 734 63309	33R 1% 1/10W
R4043	2322 734 63309	33R 1% 1/10W
R4044	2322 734 63309	33R 1% 1/10W
R4045	2322 734 63309	33R 1% 1/10W
R4046	2322 734 63309	33R 1% 1/10W
R4100	4822 051 20102	1K 5% 0,1W
R4101	4822 117 11139	1K5 1% 0,1W
R4102	4822 051 20202	2K 5% 0,1W
R4103	9965 000 12484	10K 1/10W 5%
R4104	4822 051 20223	22K 5% 0,1W
R4105	4822 117 11373	100R 1% 1/10W
R4106	4822 117 11373	100R 1% 1/10W
R4110	4822 117 11373	100R 1% 1/10W
R4111	4822 117 11373	100R 1% 1/10W
R4112	4822 117 11373	100R 1% 1/10W
R4113	9965 000 12484	10K 1/10W 5%
R4114	4822 051 20102	1K 5% 0,1W
R4115	4822 117 11373	100R 1% 1/10W
R4116	4822 117 11373	100R 1% 1/10W

COILS & FILTERS

L501	9965 000 14158	CHOKE COIL 20UH 2A
L502	9965 000 14158	CHOKE COIL 20UH 2A
L503	9965 000 14158	CHOKE COIL 20UH 2A
L505	9965 000 14158	CHOKE COIL 20UH 2A
L506	9965 000 14158	CHOKE COIL 20UH 2A

DIODES

D401	4822 130 30621	1N4148
D501	4822 130 30621	1N4148
D502	4822 130 30621	1N4148
D503	4822 130 30621	1N4148
D504	4822 130 30621	1N4148
D507	4822 130 30621	1N4148
D508	4822 130 30621	1N4148
D509	4822 130 30621	1N4148
D510	4822 130 30621	1N4148
D511	4822 130 30621	1N4148
D512	4822 130 30621	1N4148
D513	4822 130 30621	1N4148
D514	4822 130 30621	1N4148
D901	9965 000 12508 ⚠	KBU8B 8A 100V
D902	9965 000 12509 ⚠	RS402L 4A
D910	4822 130 31438 ⚠	1N4001G
D911	4822 130 31438 ⚠	1N4001G
D912	4822 130 31438 ⚠	1N4001G
D913	4822 130 31438 ⚠	1N4001G
D914	4822 130 30621 ⚠	1N4148
ZD401	4822 130 80272	MTZJ7,5C
ZD402	4822 130 80272	MTZJ7,5C
ZD403	4822 130 34167	BZX79-B6V2
ZD404	4822 130 34167	BZX79-B6V2
ZD901	9965 000 14658	ZENER 8,5-8,9V 0,5W

8-10

ELECTRICAL PARTS LIST - MAIN BOARD

TRANSISTORS & INTEGRATED CIRCUITS

IC401	9965 000 12510		TC4052BFN
IC402	9965 000 12491		JRC4558D
IC403	9965 000 12491		JRC4558D
IC404	9965 000 12491		JRC4558D
IC405	9965 000 12492		TC4053BFN
IC406	9965 000 12492		TC4053BFN
IC407	9965 000 12491		JRC4558D
IC408	9965 000 12514		M62446FP
IC409	9965 000 12491		JRC4558D
IC410	9965 000 12491		JRC4558D
IC411	9965 000 12491		JRC4558D
IC413	9965 000 12491		JRC4558D
IC501	9322 111 64687	⚠	IC TDA7269A
IC502	9322 111 64687	⚠	IC TDA7269A
IC503	9322 111 64687	⚠	IC TDA7269A
IC901	5322 209 81856	⚠	LM7912CT
IC902	4822 209 70084	⚠	NJM7812A
IC903	5322 209 81331	⚠	MC7805ACT
IC904	9965 000 12512		BA05T
Q401	4822 130 43818		2SC2878-A
Q402	4822 130 43818		2SC2878-A
Q403	4822 130 43818		2SC2878-A
Q404	4822 130 41198		2SC945P
Q405	4822 130 43818		2SC2878-A
Q501	4822 130 41198		2SC945P
Q502	4822 130 41198		2SC945P
Q503	4822 130 41198		2SC945P
Q504	4822 130 10211		2SA952
Q505	4822 130 63876		2SA733R
Q901	4822 130 41651		2SC2001L
Q902	5322 130 44523	⚠	TIP42C
Q903	5322 130 44506	⚠	TIP41C
Q908	4822 130 43818		2SC2878-A
Q910	4822 130 41198		2SC945P
Q911	4822 130 10211		2SA952
Q912	4822 130 41651		2SC2001L
Q913	4822 130 41198		2SC945P
Q914	4822 130 10211		2SA952

Note: Only the parts mentioned in this list are normal service spare parts.

MPEG BOARD

TABLE OF CONTENTS

ESS 6018 Internal Diagram 9-1
Circuit Diagram (Top Left) 9-2
Circuit Diagram (Top Right) 9-3
Circuit Diagram (Bottom Left) 9-4
Circuit Diagram (Bottom Right) 9-5
PCB Layout (Component Smt View) 9-6
PCB Layout (Compperside View) 9-7
Electrical Parts List 9-8

ESS 6018 INTERNAL DIAGRAM

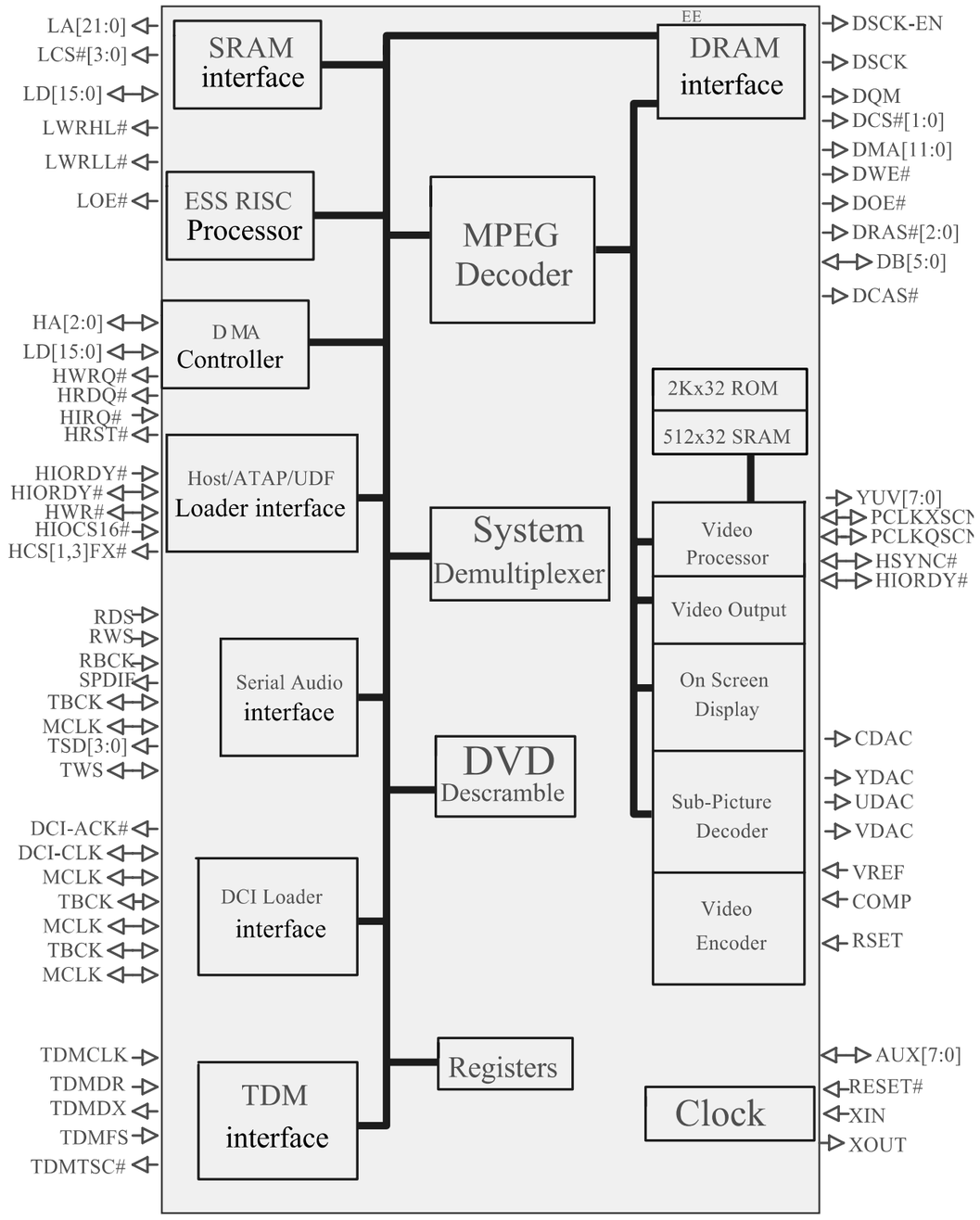

Vibratto
ESS6018

CIRCUIT DIAGRAM (Top Left)

C1	A1	C11	A2	C22	A4	C32	C5	C47	D5	C57	D5	C71	A5	C81	B6	C92	B6	C102	C6	C113	A7	C124	C7	C134	C7	C147	B7	C157	D4	C167	D3	C177	D4	C187	B6	CN1	B1	FB4	A3
C2	A1	C12	A2	C23	A1	C35	A3	C48	D4	C58	A2	C72	A5	C82	C6	C93	B6	C103	B6	C114	A7	C125	C8	C135	B7	C148	A8	C158	D3	C168	D3	C178	D3	C188	B6	CN2	C1	IC1	A1
C3	A1	C13	A2	C24	A1	C36	A3	C49	D3	C59	A2	C73	A5	C83	C6	C94	B6	C104	B6	C115	B7	C126	C8	C137	D8	C149	A8	C159	D3	C169	A8	C179	D3	C189	B6	CN3	D3	IC2	C1
C4	A1	C15	A2	C25	C5	C39	B6	C50	D4	C61	C2	C74	A6	C84	C6	C95	B6	C105	B6	C116	B7	C127	C8	C138	C8	C150	C8	C160	D3	C170	C8	C180	D3	C190	D1	CN5	D5	IC3	C1
C5	A1	C16	A4	C26	C5	C40	B6	C51	D4	C62	C3	C75	A6	C85	A6	C96	B6	C106	B6	C117	B7	C128	C8	C139	B8	C151	D5	C161	D3	C171	D5	C181	D3	C191	D1	CN6	A7	IC4	D1
C6	A1	C17	A4	C27	C5	C41	C4	C52	B5	C64	B5	C76	A6	C87	A6	C97	C6	C107	C6	C118	B7	C129	C8	C140	B8	C152	D5	C162	D3	C172	D5	C182	D4	C192	D1	CN7	A7	IC5	A2
C7	A1	C18	A4	C28	C5	C43	C4	C53	B5	C66	B5	C77	A6	C88	B6	C98	C6	C108	C6	C119	B7	C130	B7	C141	B8	C153	D5	C163	D3	C173	D5	C183	C4	C193	D1	D1	C2	IC6	B3
C8	A2	C19	A4	C29	C5	C44	D5	C54	D4	C68	A4	C78	A6	C89	B6	C99	C6	C109	B6	C120	B7	C131	B7	C142	B8	C154	D5	C164	D3	C174	D5	C184	C4	C194	D1	FB1	D4	IC7	C4
C9	A2	C20	A4	C30	C5	C45	D5	C55	D4	C69	A4	C79	B6	C90	B6	C100	C6	C110	B6	C121	C7	C132	B7	C145	B7	C155	D5	C165	D3	C175	D5	C185	C4	C195	D1	FB2	D5	IC9	D5
C10	A2	C21	A4	C31	C5	C46	D5	C56	D5	C70	A5	C80	B6	C91	B6	C101	C6	C112	B7	C122	C7	C133	C7	C146	B7	C156	D5	C166	D3	C176	D5	C186	B6	C197	C4	FB3	A2	IC10	A5

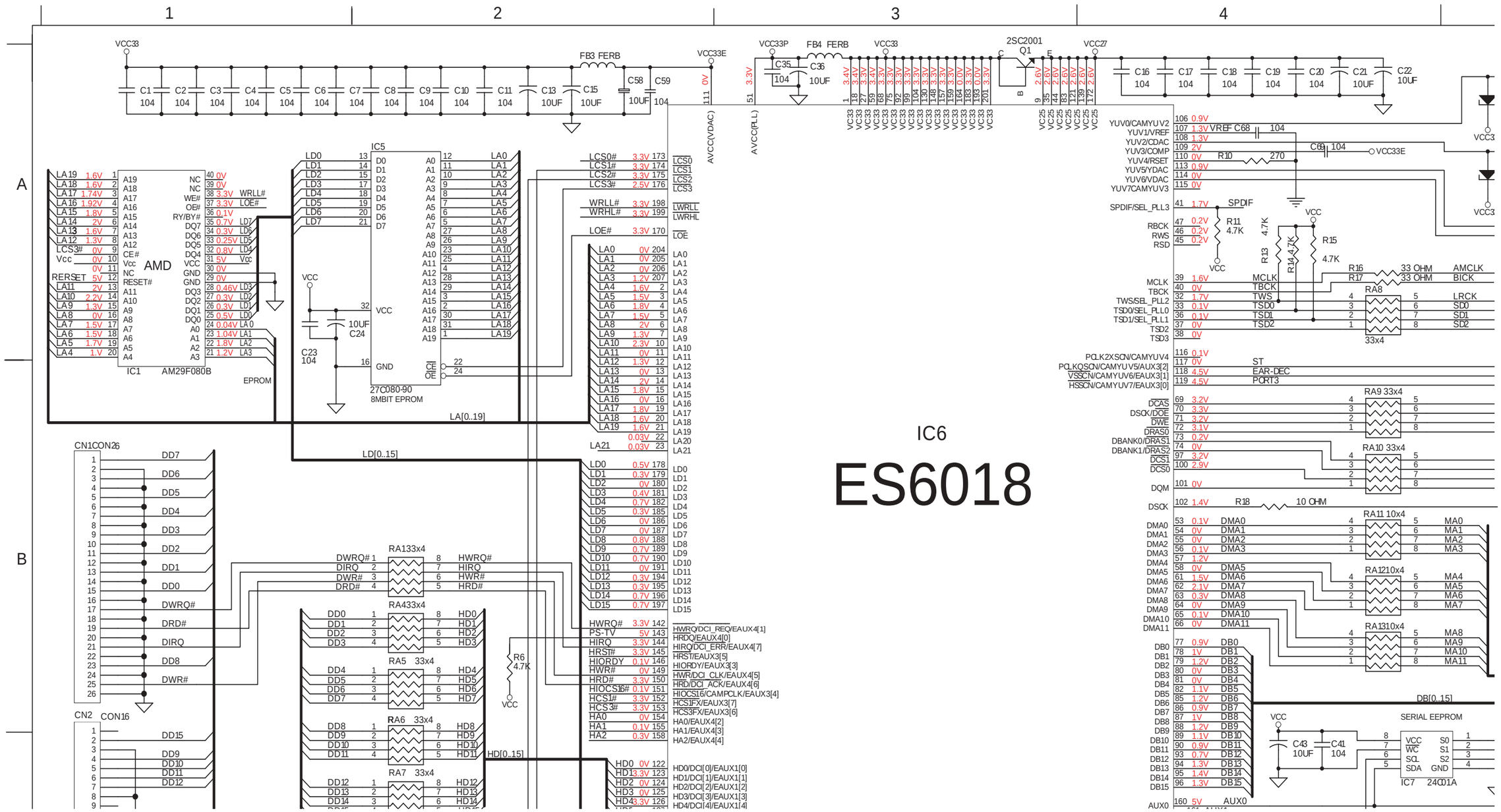

9-3

CIRCUIT DIAGRAM (Top Right)

C167	D3	C177	D4	C187	B6	CN1	B1	FB4	A3	IC18	A8	Q2	A7	RA12	B2	RA22	C2	R18	B4	R29	A6	R39	B6	R49	C6	R60	B7	R71	C8	R86	D6	R96	A7	ZD7	A6
C168	D3	C178	D3	C188	B6	CN2	C1	IC1	A1	L1	B5	RA0	C2	RA13	B4	R8	C2	R19	C4	R30	B6	R40	B6	R51	B7	R61	B7	R72	C8	R87	D6	R97	A7	ZD8	A6
C169	A8	C179	D3	C189	B6	CN3	D3	IC2	C1	L4	B6	RA1	B2	RA14	C4	R9	C2	R20	C4	R31	B6	R41	B6	R52	A7	R62	C7	R73	C8	R88	D6	R98	A7	ZD9	A6
C170	C8	C180	D3	C190	D1	CN5	D5	IC3	C1	L5	C4	RA2	B2	RA15	C5	R10	A4	R22	A5	R32	B6	R42	C6	R53	A7	R63	C7	R74	C8	R89	D6	R99	A7		
C171	D5	C181	D3	C191	D1	CN6	A7	IC4	D1	L6	C4	RA5	B2	RA16	D2	R11	A4	R23	A5	R33	B6	R43	C6	R54	A7	R64	C7	R77	C8	R90	D6	ZD1	B8		
C172	D5	C182	D4	C192	D1	CN7	A7	IC5	A2	L7	A5	RA7	C2	RA17	D2	R13	A4	R24	A6	R34	B6	R44	C6	R55	B7	R65	C7	R78	B8	R91	D6	ZD2	B8		
C173	D5	C183	C4	C193	D1	D1	C2	IC6	B3	L8	A5	RA8	A4	RA18	D2	R14	A4	R25	A6	R35	B6	R45	C6	R56	B7	R66	C7	R82	D6	R92	D6	ZD3	A5		
C174	D5	C184	C4	C194	D1	FB1	D4	IC7	C4	L9	A6	RA9	B4	RA19	D2	R15	A4	R26	A6	R36	B6	R46	C6	R57	B7	R68	C7	R83	D6	R93	D6	ZD4	A5		
C175	D5	C185	C4	C195	D1	FB2	D5	IC9	D5	L10	A6	RA10	B4	RA20	D2	R16	A4	R27	A6	R37	B6	R47	C6	R58	B7	R69	C7	R84	D6	R94	D4	ZD5	A5		
C176	D5	C186	B6	C197	C4	FB3	A2	IC10	A5	Q1	A3	RA11	B4	RA21	D2	R17	A4	R28	A6	R38	B6	R48	C6	R59	B7	R70	C8	R85	D6	R95	D4	ZD6	A5		

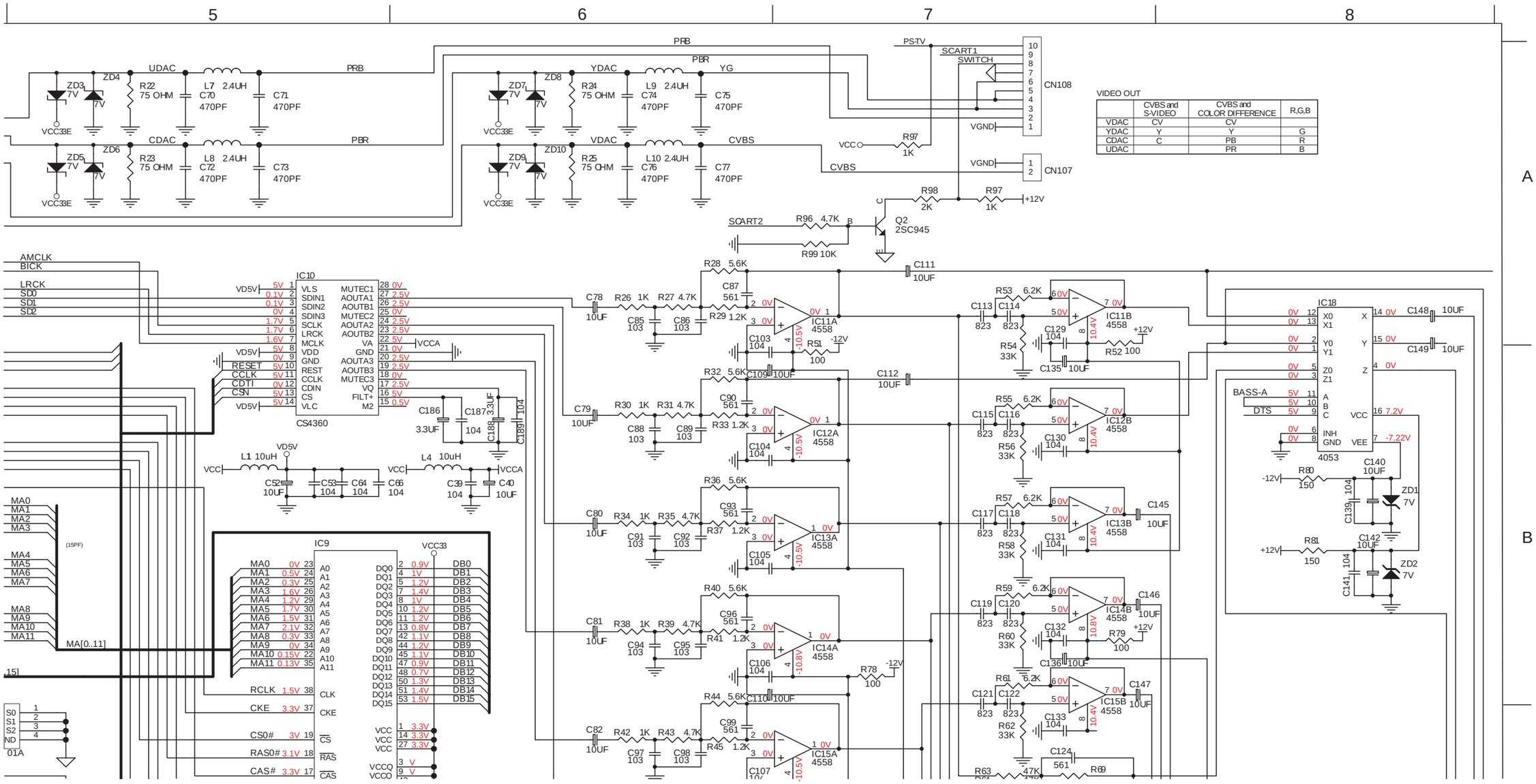

9-4

CIRCUIT DIAGRAM (Bottom Left)

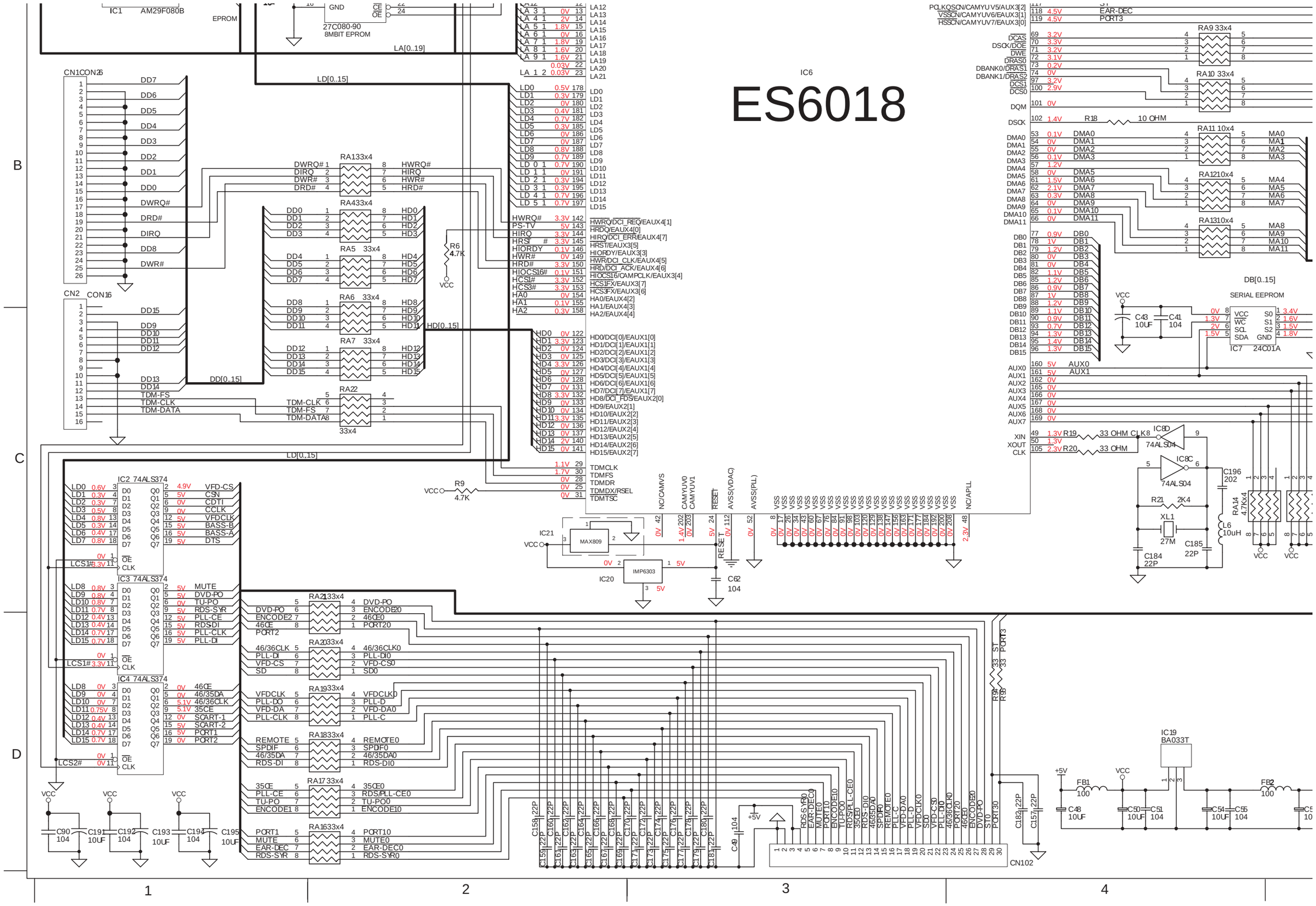

9-5

CIRCUIT DIAGRAM (Bottom Right)

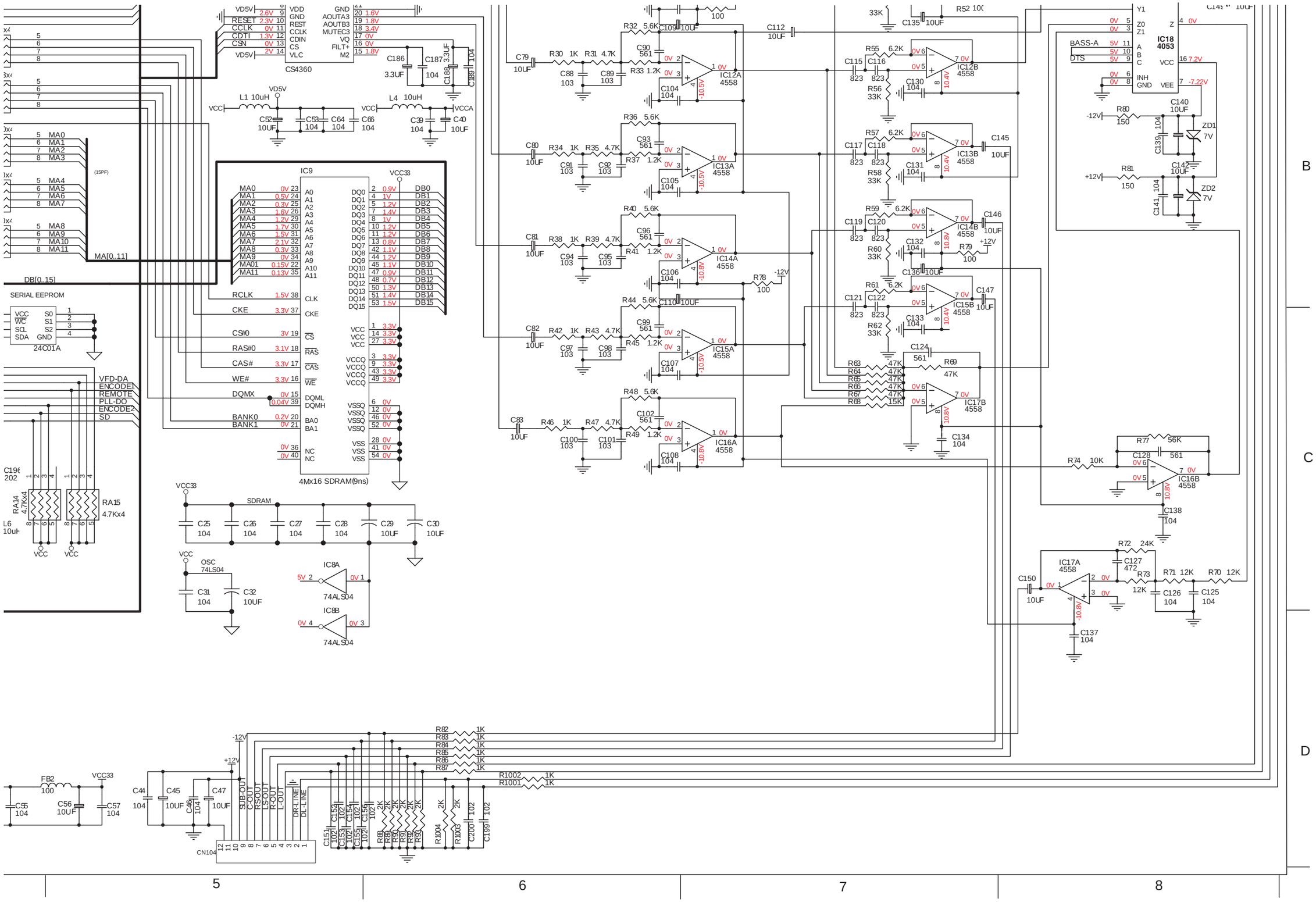

9-6

PCB LAYOUT (COMPONENT SMT VIEW)

C13	A2	C36	C3	C56	C2	C74	A4	C85	C4	C95	C5	C106	C5	C116	D5	C127	C6	C137	C5	C149	C6	C178	A6	CN1	A4	IC15	D4	IC16	C5	L10	A4	RA10	B4
C15	D1	C40	C2	C57	C1	C75	A5	C86	C4	C96	C5	C107	D4	C117	D4	C128	C5	C138	C5	C150	C6	C179	A6	CN2	A3	IC6	C2	IC17	C6	Q1	C1	RA11	C3
C18	D1	C41	A2	C58	A3	C76	A3	C87	D5	C97	D4	C108	C5	C118	D4	C129	D5	C139	D6	C170	B6	C180	A6	CN104	C6	IC7	A2	IC18	D6	Q2	B5	RA12	C3
C21	D1	C43	A2	C61	C3	C77	A4	C88	D5	C98	D4	C109	D6	C119	C5	C130	D5	C140	D6	C171	B6	C181	A6	D1	D3	IC8	D3	IC19	C1	RA1	A2	RA13	B3
C22	A2	C45	B6	C68	A3	C78	D3	C89	D5	C100	C5	C110	B6	C120	C5	C131	D5	C141	D6	C172	B6	C186	D2	FB1	B6	IC9	B4	L1	D2	RA4	A3	RA14	B2
C24	C1	C47	C6	C69	A3	C79	D3	C90	D5	C101	C5	C111	C5	C121	D4	C132	C5	C142	D6	C173	B6	C188	D2	FB2	C1	IC10	D3	L4	D2	RA5	A3	RA15	B2
C26	B4	C48	B6	C70	A5	C80	D3	C91	D4	C102	C5	C112	D5	C122	D4	C133	D4	C145	C6	C174	B6	C190	B1	IC1	B1	IC11	D5	L5	D4	RA6	A3	RA16	B6
C29	C4	C50	C1	C71	A6	C81	D2	C92	D4	C103	D5	C113	D5	C124	C6	C134	C6	C146	C6	C175	B6	C191	B1	IC2	A1	IC12	D5	L7	A5	RA7	A2	RA17	B6
C30	B4	C52	D2	C72	A5	C82	D3	C93	D5	C104	D5	C114	D5	C125	C5	C135	D6	C147	C5	C176	B6	C193	B5	IC4	B5	IC13	D5	L8	A5	RA8	C3	RA18	B6
C32	D3	C54	C1	C73	A5	C83	D3	C94	C5	C105	D4	C115	D5	C126	C5	C136	C6	C148	C6	C177	B6	C195	B5	IC7	A2	IC14	C5	L9	A4	RA9	B3	RA19	B6

RA20	A6	R26	C4	R36	C5	R46	B4	R57	D5	R67	C5	R79	C6	R97	B6	ZD5	A6
RA21	A6	R27	C4	R37	D5	R47	B4	R58	D4	R68	C5	R80	D6	R98	B6	ZD6	A5
RA22	A2	R28	C5	R38	C4	R48	B4	R59	C4	R69	C6	R81	D6	R99	B6	ZD7	A5
R8	C3	R29	C5	R39	C4	R49	B4	R60	C4	R70	C5	R82	C6	R1001	C6	ZD8	A4
R10	A3	R30	D5	R40	C4	R51	D6	R61	D4	R71	C5	R83	C6	R1002	C6	ZD9	A4
R16	C3	R31	C5	R41	C4	R52	D6	R62	D4	R72	C6	R84	C6	XL1	C4	ZD10	A4
R17	C3	R32	C5	R42	D4	R53	D5	R63	B5	R73	C6	R85	C6	ZD1	D6		
R18	B3	R33	C5	R43	D4	R54	D5	R64	B5	R74	C4	R86	C6	ZD2	D6		
R19	C3	R34	C4	R44	D4	R55	D5	R65	C5	R77	C4	R87	C6	ZD3	A6		
R20	C3	R35	C4	R45	D4	R56	D5	R66	C5	R78	C6	R96	B5	ZD4	A5		

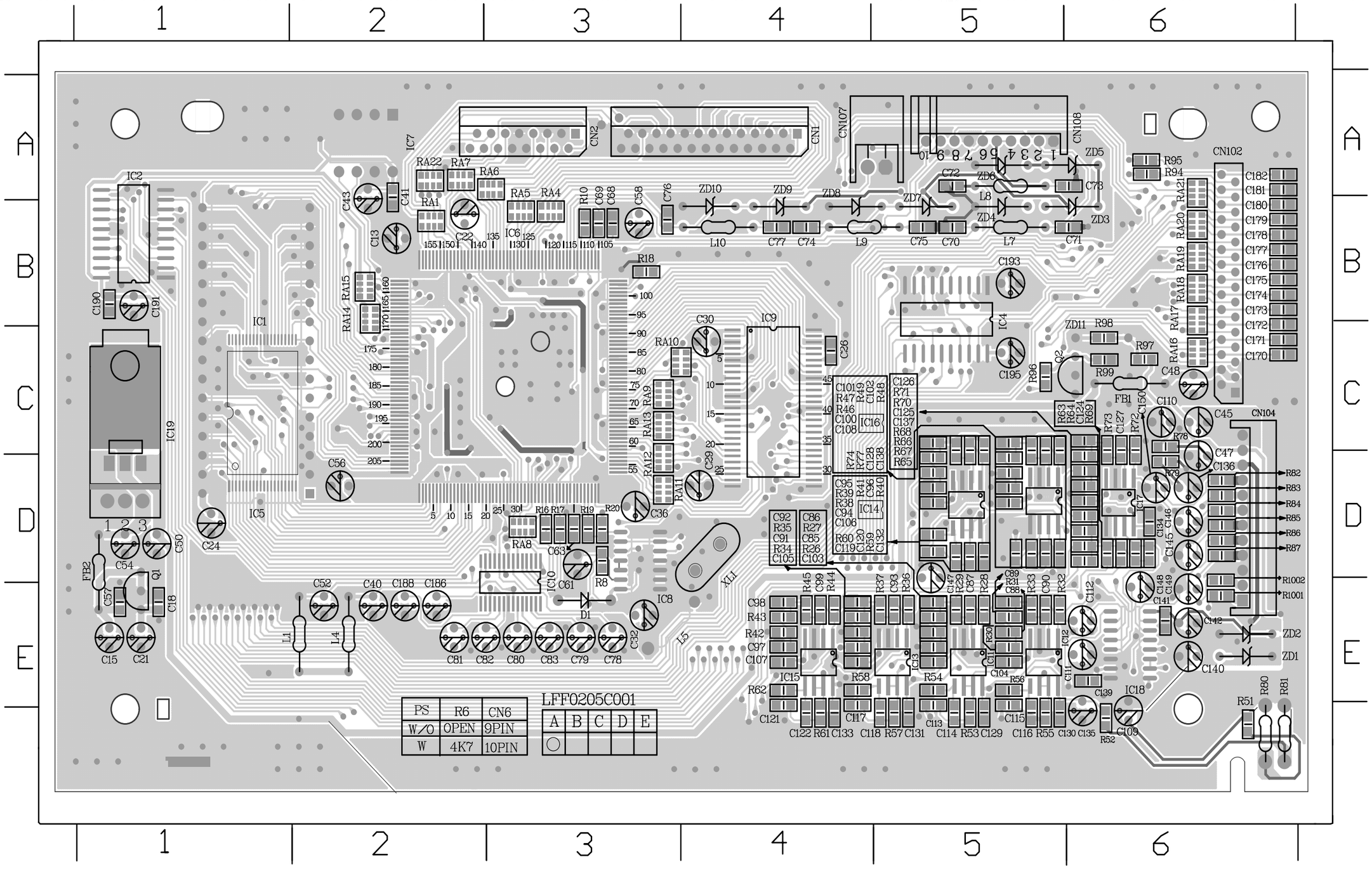

9-7

PCB LAYOUT (COMPPERSIDE VIEW)

C1	B3	C11	C3	C31	C3	C62	D2	C158	A6	C168	C6	C199	E6	R13	C3	R90	D6
C2	D2	C16	B3	C35	D3	C64	D2	C159	A6	C169	C6	C200	E6	R14	C3	R91	D6
C3	B2	C17	C3	C39	D3	C66	D2	C160	B6	C183	D4	FB3	B3	R15	C3	R92	D6
C4	B2	C19	D3	C44	C6	C151	D6	C161	B6	C184	D4	FB4	D3	R21	D4	R93	D6
C5	B3	C20	B2	C46	C6	C152	D6	C162	B6	C185	D4	IC3	B5	R22	B5		
C6	C2	C23	C1	C49	C6	C153	D6	C163	B6	C187	D2	IC7	A2	R23	A5		
C7	B3	C25	D4	C51	D1	C154	D6	C164	B6	C189	D2	IC20	D3	R24	B4		
C8	C3	C26	C4	C53	D3	C155	D6	C165	B6	C194	B5	R6	C3	R25	A3		
C9	B3	C27	D2	C55	D1	C156	D6	C166	B6	C196	D4	R9	C3	R88	D6		
C10	C2	C28	B4	C59	B3	C157	A6	C167	B6	C197	D3	R11	C3	R89	D6		

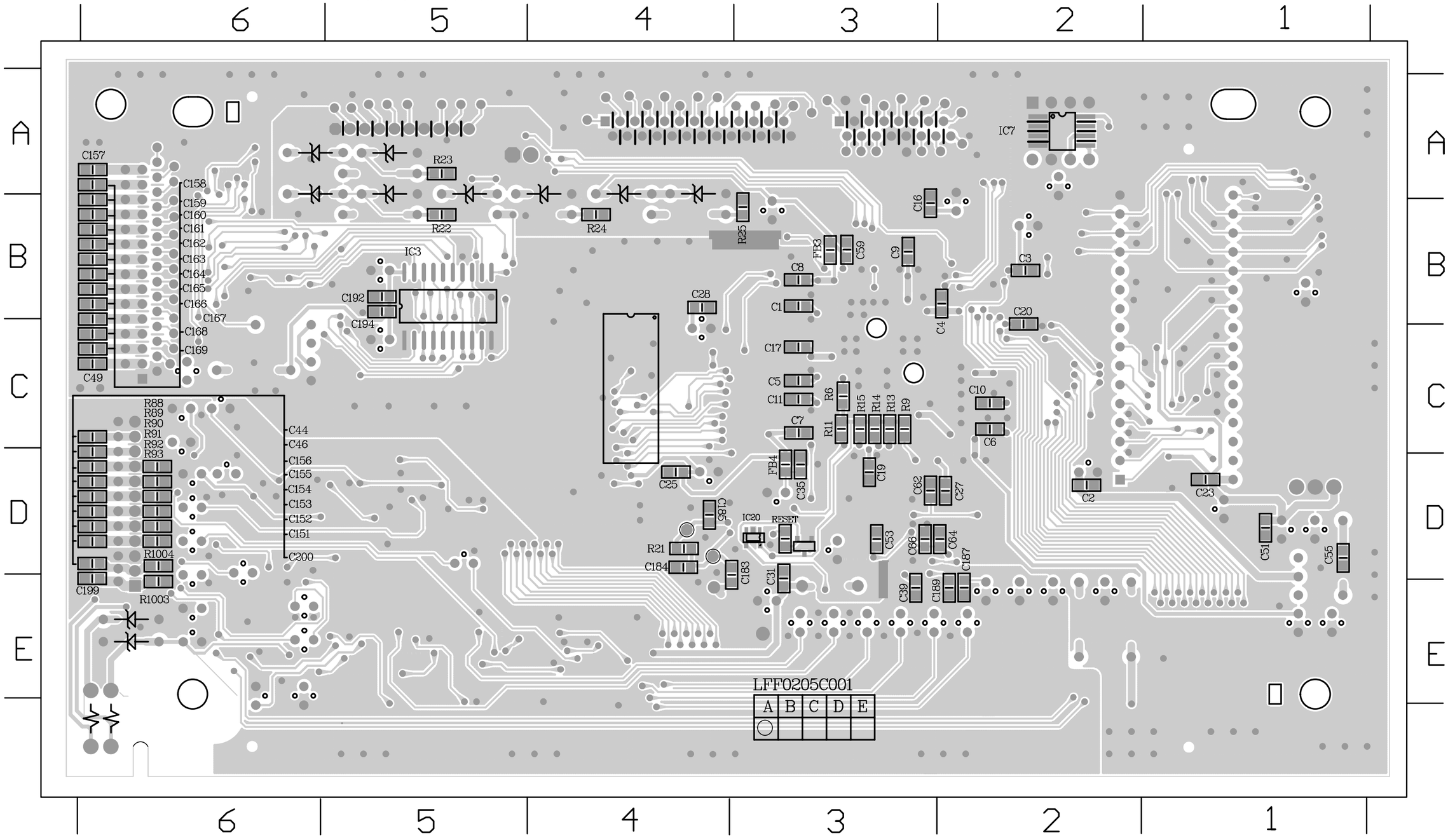

ELECTRICAL PARTS LIST - MPEG BOARD

MISCELLANEOUS

CN1	9965 000 12467	SOCKET FFC 26PIN HORT.
CN2	9965 000 12468	SOCKET FFC 16PIN HORT.
CN102	9965 000 12469	SOCKET FFC 28PIN HORT.
XL1	9965 000 13072	CRYSTAL 27MHZ

CAPACITORS

C1	4822 126 14585	100NF 10% 50V
C2	4822 126 14585	100NF 10% 50V
C3	4822 126 14585	100NF 10% 50V
C4	4822 126 14585	100NF 10% 50V
C5	4822 126 14585	100NF 10% 50V
C6	4822 126 14585	100NF 10% 50V
C7	4822 126 14585	100NF 10% 50V
C8	4822 126 14585	100NF 10% 50V
C9	4822 126 14585	100NF 10% 50V
C01	5322 122 32658	22PF 5% 50V
C02	5322 122 32658	22PF 5% 50V
C10	4822 126 14585	100NF 10% 50V
C11	4822 126 14585	100NF 10% 50V
C13	9965 000 14666	10UF 16V 20%
C15	9965 000 14666	10UF 16V 20%
C16	4822 126 14585	100NF 10% 50V
C17	4822 126 14585	100NF 10% 50V
C18	4822 126 14585	100NF 10% 50V
C19	4822 126 14585	100NF 10% 50V
C20	4822 126 14585	100NF 10% 50V
C21	9965 000 14666	10UF 16V 20%
C22	9965 000 14666	10UF 16V 20%
C23	4822 126 14585	100NF 10% 50V
C24	9965 000 14666	10UF 16V 20%
C25	4822 126 14585	100NF 10% 50V
C26	4822 126 14585	100NF 10% 50V
C27	4822 126 14585	100NF 10% 50V
C28	4822 126 14585	100NF 10% 50V
C29	9965 000 14666	10UF 16V 20%
C30	9965 000 14666	10UF 16V 20%
C31	4822 126 14585	100NF 10% 50V
C32	9965 000 14666	10UF 16V 20%
C35	4822 126 14585	100NF 10% 50V
C36	9965 000 14666	10UF 16V 20%
C39	4822 126 14585	100NF 10% 50V
C40	9965 000 14666	10UF 16V 20%
C41	4822 126 14585	100NF 10% 50V
C43	9965 000 14666	10UF 16V 20%
C44	4822 126 14585	100NF 10% 50V
C45	9965 000 14666	10UF 16V 20%
C46	4822 126 14585	100NF 10% 50V
C47	9965 000 14666	10UF 16V 20%
C48	9965 000 14666	10UF 16V 20%
C49	4822 126 14585	100NF 10% 50V
C50	9965 000 14666	10UF 16V 20%
C51	4822 126 14585	100NF 10% 50V
C52	9965 000 14666	10UF 16V 20%
C53	4822 126 14585	100NF 10% 50V
C54	9965 000 14666	10UF 16V 20%
C55	4822 126 14585	100NF 10% 50V
C56	9965 000 14666	10UF 16V 20%
C57	4822 126 14585	100NF 10% 50V
C58	9965 000 14666	10UF 16V 20%
C59	4822 126 14585	100NF 10% 50V
C61	9965 000 14666	10UF 16V 20%
C62	4822 126 14585	100NF 10% 50V
C64	4822 126 14585	100NF 10% 50V
C66	4822 126 14585	100NF 10% 50V
C68	4822 126 14585	100NF 10% 50V
C69	4822 126 14585	100NF 10% 50V
C70	9965 000 12475	470PF 50V 5%
C71	9965 000 12475	470PF 50V 5%
C72	9965 000 12475	470PF 50V 5%
C73	9965 000 12475	470PF 50V 5%
C74	9965 000 12475	470PF 50V 5%
C75	9965 000 12475	470PF 50V 5%
C76	9965 000 12475	470PF 50V 5%
C77	9965 000 12475	470PF 50V 5%
C78	9965 000 14666	10UF 16V 20%
C79	9965 000 14666	10UF 16V 20%
C80	9965 000 14666	10UF 16V 20%
C81	9965 000 14666	10UF 16V 20%
C82	9965 000 14666	10UF 16V 20%
C83	9965 000 14666	10UF 16V 20%
C85	9965 000 12476	0,01UF 50V 20%
C86	9965 000 12476	0,01UF 50V 20%
C87	5322 116 80853	560PF 5% 63V
C88	9965 000 12476	0,01UF 50V 20%
C89	9965 000 12476	0,01UF 50V 20%
C90	5322 116 80853	560PF 5% 63V
C91	9965 000 12476	0,01UF 50V 20%
C92	9965 000 12476	0,01UF 50V 20%
C93	5322 116 80853	560PF 5% 63V
C94	9965 000 12476	0,01UF 50V 20%
C95	9965 000 12476	0,01UF 50V 20%
C96	5322 116 80853	560PF 5% 63V
C97	9965 000 12476	0,01UF 50V 20%
C98	9965 000 12476	0,01UF 50V 20%
C100	9965 000 12476	0,01UF 50V 20%
C101	9965 000 12476	0,01UF 50V 20%
C102	5322 116 80853	560PF 5% 63V
C103	4822 126 14585	100NF 10% 50V
C104	4822 126 14585	100NF 10% 50V
C105	4822 126 14585	100NF 10% 50V
C106	4822 126 14585	100NF 10% 50V
C107	4822 126 14585	100NF 10% 50V
C108	4822 126 14585	100NF 10% 50V
C109	9965 000 14666	10UF 16V 20%

9-8

ELECTRICAL PARTS LIST - MPEG BOARD

C110	9965 000 14666	10UF 16V 20%
C111	9965 000 14666	10UF 16V 20%
C112	9965 000 14666	10UF 16V 20%
C113	9965 000 14667	0,082UF 25V 10%
C114	9965 000 14667	0,082UF 25V 10%
C115	9965 000 14667	0,082UF 25V 10%
C116	9965 000 14667	0,082UF 25V 10%
C117	9965 000 14667	0,082UF 25V 10%
C118	9965 000 14667	0,082UF 25V 10%
C119	9965 000 14667	0,082UF 25V 10%
C120	9965 000 14667	0,082UF 25V 10%
C121	9965 000 14667	0,082UF 25V 10%
C122	9965 000 14667	0,082UF 25V 10%
C124	5322 116 80853	560PF 5% 63V
C125	4822 126 14585	100NF 10% 50V
C126	4822 126 14585	100NF 10% 50V
C127	5322 126 10223	4,7NF 10% 63V
C128	5322 116 80853	560PF 5% 63V
C129	4822 126 14585	100NF 10% 50V
C130	4822 126 14585	100NF 10% 50V
C131	4822 126 14585	100NF 10% 50V
C132	4822 126 14585	100NF 10% 50V
C133	4822 126 14585	100NF 10% 50V
C134	4822 126 14585	100NF 10% 50V
C135	9965 000 14666	10UF 16V 20%
C136	9965 000 14666	10UF 16V 20%
C137	4822 126 14585	100NF 10% 50V
C138	4822 126 14585	100NF 10% 50V
C139	4822 126 14585	100NF 10% 50V
C140	9965 000 14666	10UF 16V 20%
C141	4822 126 14585	100NF 10% 50V
C142	9965 000 14666	10UF 16V 20%
C145	9965 000 14666	10UF 16V 20%
C146	9965 000 14666	10UF 16V 20%
C147	9965 000 14666	10UF 16V 20%
C148	9965 000 14666	10UF 16V 20%
C149	9965 000 14666	10UF 16V 20%
C150	9965 000 14666	10UF 16V 20%
C151	9965 000 14135	0,001UF 50V 10%
C152	9965 000 14135	0,001UF 50V 10%
C153	9965 000 14135	0,001UF 50V 10%
C154	9965 000 14135	0,001UF 50V 10%
C155	9965 000 14135	0,001UF 50V 10%
C156	9965 000 14135	0,001UF 50V 10%
C158	5322 122 32658	22PF 5% 50V
C159	5322 122 32658	22PF 5% 50V
C160	5322 122 32658	22PF 5% 50V
C161	5322 122 32658	22PF 5% 50V
C162	5322 122 32658	22PF 5% 50V
C163	5322 122 32658	22PF 5% 50V
C164	5322 122 32658	22PF 5% 50V
C165	5322 122 32658	22PF 5% 50V
C166	5322 122 32658	22PF 5% 50V
C167	5322 122 32658	22PF 5% 50V
C168	5322 122 32658	22PF 5% 50V
C169	5322 122 32658	22PF 5% 50V
C170	5322 122 32658	22PF 5% 50V
C171	5322 122 32658	22PF 5% 50V
C172	5322 122 32658	22PF 5% 50V
C173	5322 122 32658	22PF 5% 50V
C174	5322 122 32658	22PF 5% 50V
C175	5322 122 32658	22PF 5% 50V
C176	5322 122 32658	22PF 5% 50V
C177	5322 122 32658	22PF 5% 50V
C178	5322 122 32658	22PF 5% 50V
C179	5322 122 32658	22PF 5% 50V
C180	5322 122 32658	22PF 5% 50V
C181	5322 122 32658	22PF 5% 50V
C183	9965 000 14668	0,002UF 50V 20%
C184	5322 122 32658	22PF 5% 50V
C185	5322 122 32658	22PF 5% 50V
C186	9965 000 14669	3,3UF 50V 20%
C187	4822 126 14585	100NF 10% 50V
C188	9965 000 14669	3,3UF 50V 20%
C189	4822 126 14585	100NF 10% 50V
C190	4822 126 14585	100NF 10% 50V
C191	9965 000 14666	10UF 16V 20%
C192	4822 126 14585	100NF 10% 50V
C193	9965 000 14666	10UF 16V 20%
C194	4822 126 14585	100NF 10% 50V
C195	9965 000 14666	10UF 16V 20%
C199	9965 000 14135	0,001UF 50V 10%
C200	9965 000 14135	0,001UF 50V 10%

RESISTORS

R6	4822 051 20472	4K7 5% 0,1W
R8	4822 051 20223	22K 5% 0,1W
R9	4822 051 20472	4K7 5% 0,1W
R10	4822 117 11504	270R 1% 0,1W
R11	4822 051 20472	4K7 5% 0,1W
R13	4822 051 20472	4K7 5% 0,1W
R14	4822 051 20472	4K7 5% 0,1W
R15	4822 051 20472	4K7 5% 0,1W
R16	2322 734 63309	33R 1% 1/10W
R17	2322 734 63309	33R 1% 1/10W
R18	4822 051 20109	10R 5% 0,1W
R19	2322 734 63309	33R 1% 1/10W
R20	2322 734 63309	33R 1% 1/10W
R21	4822 051 20242	2K4 5% 0,1W
R22	4822 117 11927	75R 1% 0,1W
R23	4822 117 11927	75R 1% 0,1W
R24	4822 117 11927	75R 1% 0,1W
R25	4822 117 11927	75R 1% 0,1W
R26	4822 051 20102	1K 5% 0,1W

ELECTRICAL PARTS LIST - MPEG BOARD

RESISTORS

R27	4822 051 20472	4K7 5% 0,1W
R28	4822 051 20562	5K6 5% 0,1W
R29	4822 051 20122	1K2 5% 0,1W
R30	4822 051 20102	1K 5% 0,1W
R31	4822 051 20472	4K7 5% 0,1W
R32	4822 051 20562	5K6 5% 0,1W
R33	4822 051 20122	1K2 5% 0,1W
R34	4822 051 20102	1K 5% 0,1W
R35	4822 051 20472	4K7 5% 0,1W
R36	4822 051 20562	5K6 5% 0,1W
R37	4822 051 20122	1K2 5% 0,1W
R38	4822 051 20102	1K 5% 0,1W
R39	4822 051 20472	4K7 5% 0,1W
R40	4822 051 20562	5K6 5% 0,1W
R41	4822 051 20122	1K2 5% 0,1W
R42	4822 051 20102	1K 5% 0,1W
R43	4822 051 20472	4K7 5% 0,1W
R44	4822 051 20562	5K6 5% 0,1W
R45	4822 051 20122	1K2 5% 0,1W
R46	4822 051 20102	1K 5% 0,1W
R47	4822 051 20472	4K7 5% 0,1W
R48	4822 051 20562	5K6 5% 0,1W
R49	4822 051 20122	1K2 5% 0,1W
R51	4822 117 11373	100R 1% 1/10W
R52	4822 117 11373	100R 1% 1/10W
R53	4822 051 20622	6K2 5% 0,1W
R54	4822 051 20333	33K 5% 0,1W
R55	4822 051 20622	6K2 5% 0,1W
R56	4822 051 20333	33K 5% 0,1W
R57	4822 051 20622	6K2 5% 0,1W
R58	4822 051 20333	33K 5% 0,1W
R59	4822 051 20622	6K2 5% 0,1W
R60	4822 051 20333	33K 5% 0,1W
R61	4822 051 20622	6K2 5% 0,1W
R62	4822 051 20333	33K 5% 0,1W
R63	9965 000 12482	47K 1/10W 5%
R64	9965 000 12482	47K 1/10W 5%
R65	9965 000 12482	47K 1/10W 5%
R66	9965 000 12482	47K 1/10W 5%
R67	9965 000 12482	47K 1/10W 5%
R68	4822 116 83933	15K 1% 0,1W
R69	9965 000 12482	47K 1/10W 5%
R70	9965 000 12483	12K 1/10W 5%
R71	9965 000 12483	12K 1/10W 5%
R72	4822 051 20243	24K 5% 0,1W
R73	9965 000 12483	12K 1/10W 5%
R74	9965 000 12484	10K 1/10W 5%
R77	4822 117 11148	56K 1% 0,1W
R78	4822 117 11373	100R 1% 1/10W
R79	4822 117 11373	100R 1% 1/10W
R80	9965 000 12485	150R 1/6W 5%
R81	9965 000 12485	150R 1/6W 5%
R82	4822 051 20102	1K 5% 0,1W
R83	4822 051 20102	1K 5% 0,1W
R84	4822 051 20102	1K 5% 0,1W
R85	4822 051 20102	1K 5% 0,1W
R86	4822 051 20102	1K 5% 0,1W
R87	4822 051 20102	1K 5% 0,1W
R88	4822 051 20202	2K 5% 0,1W
R89	4822 051 20202	2K 5% 0,1W
R90	4822 051 20202	2K 5% 0,1W
R91	4822 051 20202	2K 5% 0,1W
R92	4822 051 20202	2K 5% 0,1W
R93	4822 051 20202	2K 5% 0,1W
R96	4822 051 20472	4K7 5% 0,1W
R97	4822 051 20102	1K 5% 0,1W
R98	4822 051 20202	2K 5% 0,1W
R99	9965 000 12484	10K 1/10W 5%
R1001	4822 051 20102	1K 5% 0,1W
R1002	4822 051 20102	1K 5% 0,1W
R1003	4822 051 20202	2K 5% 0,1W
R1004	4822 051 20202	2K 5% 0,1W
RA1	9965 000 12486	RES ARRAY 4 x 33R 1/10W 5%
RA4	9965 000 12486	RES ARRAY 4 x 33R 1/10W 5%
RA5	9965 000 12486	RES ARRAY 4 x 33R 1/10W 5%
RA6	9965 000 12486	RES ARRAY 4 x 33R 1/10W 5%
RA7	9965 000 12486	RES ARRAY 4 x 33R 1/10W 5%
RA8	9965 000 12486	RES ARRAY 4 x 33R 1/10W 5%
RA9	9965 000 12486	RES ARRAY 4 x 33R 1/10W 5%
RA10	9965 000 12486	RES ARRAY 4 x 33R 1/10W 5%
RA11	9965 000 12487	RES ARRAY 4 x 10R 1/10W 5%
RA12	9965 000 12487	RES ARRAY 4 x 10R 1/10W 5%
RA13	9965 000 12487	RES ARRAY 4 x 10R 1/10W 5%
RA14	9965 000 12488	RES ARRAY 4 x 4,7K 1/10W 5%
RA15	9965 000 12488	RES ARRAY 4 x 4,7K 1/10W 5%
RA16	9965 000 12486	RES ARRAY 4 x 33R 1/10W 5%
RA17	9965 000 12486	RES ARRAY 4 x 33R 1/10W 5%
RA18	9965 000 12486	RES ARRAY 4 x 33R 1/10W 5%
RA19	9965 000 12486	RES ARRAY 4 x 33R 1/10W 5%
RA20	9965 000 12486	RES ARRAY 4 x 33R 1/10W 5%
RA21	9965 000 12486	RES ARRAY 4 x 33R 1/10W 5%
RA22	9965 000 12486	RES ARRAY 4 x 33R 1/10W 5%

COILS & FILTERS

FB1	9965 000 12470	BEAD FERITE 100R AT 100MHZ
FB2	9965 000 12470	BEAD FERITE 100R AT 100MHZ
FB3	9965 000 12471	BEAD FERITE 600R AT 100MHZ
FB4	9965 000 12471	BEAD FERITE 600R AT 100MHZ
L1	4822 157 10568	CHOKE COIL 10UH
L4	4822 157 10568	CHOKE COIL 10UH
L5	4822 157 10568	CHOKE COIL 10UH
L7	9965 000 12472	CHOKE 2,4UH
L8	9965 000 12472	CHOKE 2,4UH
L9	9965 000 12472	CHOKE 2,4UH

ELECTRICAL PARTS LIST - MPEG BOARD

COILS & FILTERS

L10	9965 000 12472	CHOKE 2,4UH

DIODES

D1	4822 130 30621	1N4148
ZD1	4822 130 80272	MTZJ7,5C
ZD2	4822 130 80272	MTZJ7,5C
ZD3	4822 130 80272	MTZJ7,5C
ZD4	4822 130 80272	MTZJ7,5C
ZD5	4822 130 80272	MTZJ7,5C
ZD6	4822 130 80272	MTZJ7,5C
ZD7	4822 130 80272	MTZJ7,5C
ZD8	4822 130 80272	MTZJ7,5C
ZD9	4822 130 80272	MTZJ7,5C
ZD10	4822 130 80272	MTZJ7,5C

TRANSISTORS & INTEGRATED CIRCUITS

IC1	9965 000 12489	EEPROM AM29F080B-90CE
IC2	9965 000 12494	74HC374
IC3	9965 000 12494	74HC374
IC4	9965 000 12494	74HC374
IC6	9965 000 12495	ES6018 MICRO CPU
IC7	9965 000 12497	EEPROM AT24C02
IC8	9965 000 12498	74HCU04D PHILIPS
IC9	9965 000 12499	SYNCHRO, DRAM 4MX16 Y3V TW
IC10	9965 000 12490	CS4360
IC11	9965 000 12491	JRC4558D
IC12	9965 000 12491	JRC4558D
IC13	9965 000 12491	JRC4558D
IC14	9965 000 12491	JRC4558D
IC15	9965 000 12491	JRC4558D
IC16	9965 000 12491	JRC4558D
IC17	9965 000 12491	JRC4558D
IC18	9965 000 12492	TC4053BFN
IC19	9965 000 12493	BA033T REGULATOR 3,3V 1A
IC20	9965 000 14670	IMP6303 140MS SOT-23
Q1	4822 130 41651	2SC2001L
Q2	4822 130 41651	2SC2001L

Note: Only the parts mentioned in this list are normal service spare parts.

RGB BOARD

TABLE OF CONTENTS

Circuit Diagram 10-2
PCB Layout 10-2
Electrical Parts List 10-3

CIRCUIT DIAGRAM - RGB BOARD

C181 C2 C183 A2 C185 B2 FB182 B2 FB185 C2 JK182 C1 RB107 B4 ZD181 A2 ZD183 A3 ZD185 B3
C182 A2 C184 B2 C187 A2 FB183 B2 JK181 B1 JK184 A1 RB181 A4 ZD182 A2 ZD184 B3 ZD186 C3

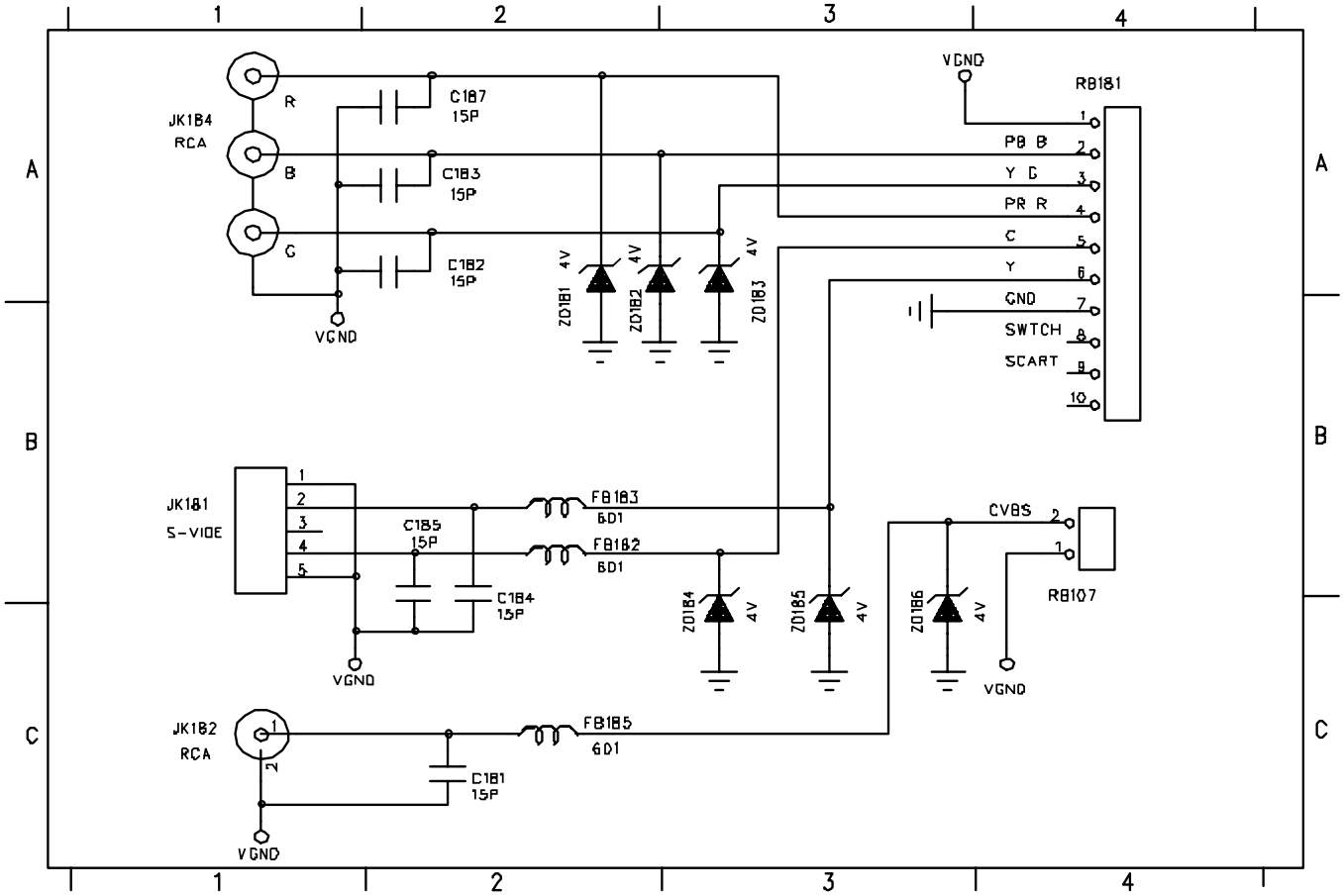

PCB LAYOUT - RGB BOARD

C181 C1 C183 C4 C185 C2 ESC1 C1 FB183 C2 JW1001 C5 JK181 B3 JK184 B5 RB181 C5 ZD182 B5 ZD184 B3 ZD186 C1
C182 C3 C184 C2 C187 C2 FB182 C2 FB185 C1 JW1002 B3 JK182 B1 RB107 C3 ZD181 C4 ZD183 C5 ZD185 B3

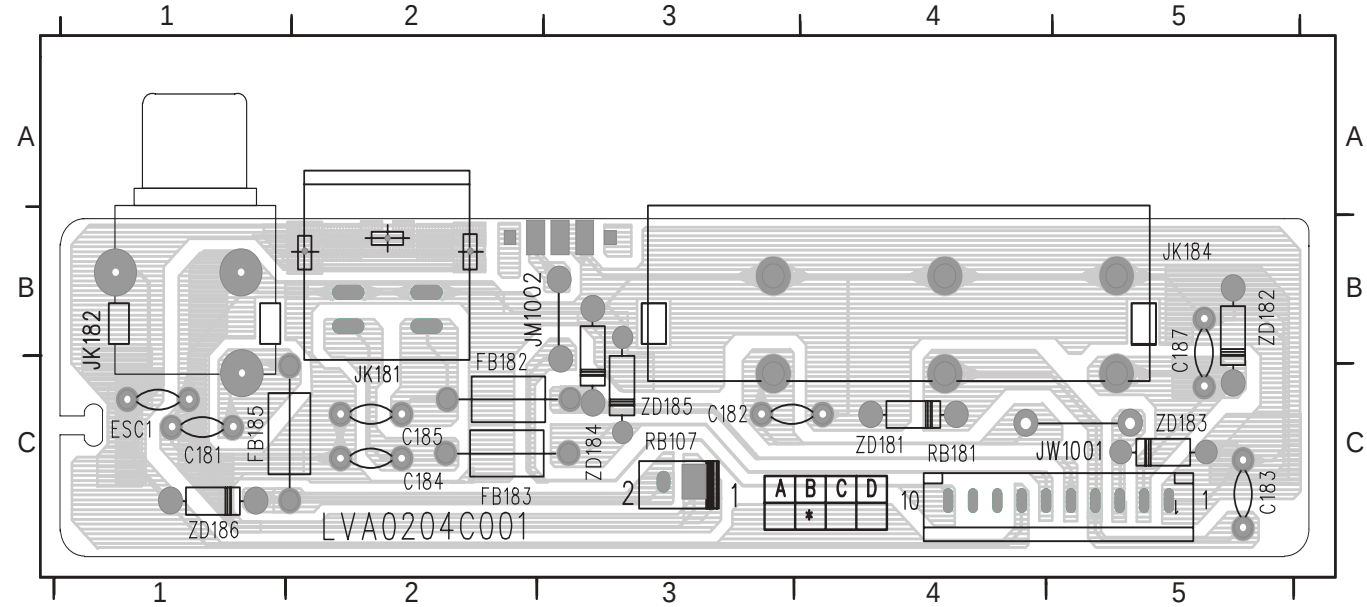

ELECTRICAL PARTS LIST - RGB BOARD

MISCELLANEOUS

JK181	9965 000 12607	DIN JACK, S-VIDEO OUT
JK182	9965 000 12608	RCA JACK YELLOW, VIDEO OUT
JK184	9965 000 12609	RCA JACK R/G/B

CAPACITORS

C181	9965 000 12590	15PF 50V 5%
C182	9965 000 12590	15PF 50V 5%
C183	9965 000 12590	15PF 50V 5%
C184	9965 000 12590	15PF 50V 5%
C185	9965 000 12590	15PF 50V 5%
C187	9965 000 12590	15PF 50V 5%
ESC1	9965 000 13094	0,068UF 50V 10%

COILS & FILTERS

FB182	9965 000 12470	BEAD FERITE 100R AT 100MHZ
FB183	9965 000 12470	BEAD FERITE 100R AT 100MHZ
FB185	9965 000 12470	BEAD FERITE 100R AT 100MHZ

DIODES

ZD181	4822 130 31554	BZX79-B4V3
ZD182	4822 130 31554	BZX79-B4V3
ZD183	4822 130 31554	BZX79-B4V3
ZD184	4822 130 31554	BZX79-B4V3
ZD185	4822 130 31554	BZX79-B4V3
ZD186	4822 130 31554	BZX79-B4V3

Note: Only the parts mentioned in this list are normal service spare parts.

SURROUND BOARD

TABLE OF CONTENTS

Internal TC4053 Block Surround Diagram 11-1
Surround Diagram 11-1
Circuit Diagram 11-2
PCB Layout (Component View) 11-3
PCB Layout (Copperside View)..... 11-3
Electrical Parts List 11-4

INTERNAL TC4053 BLOCK DIAGRAM

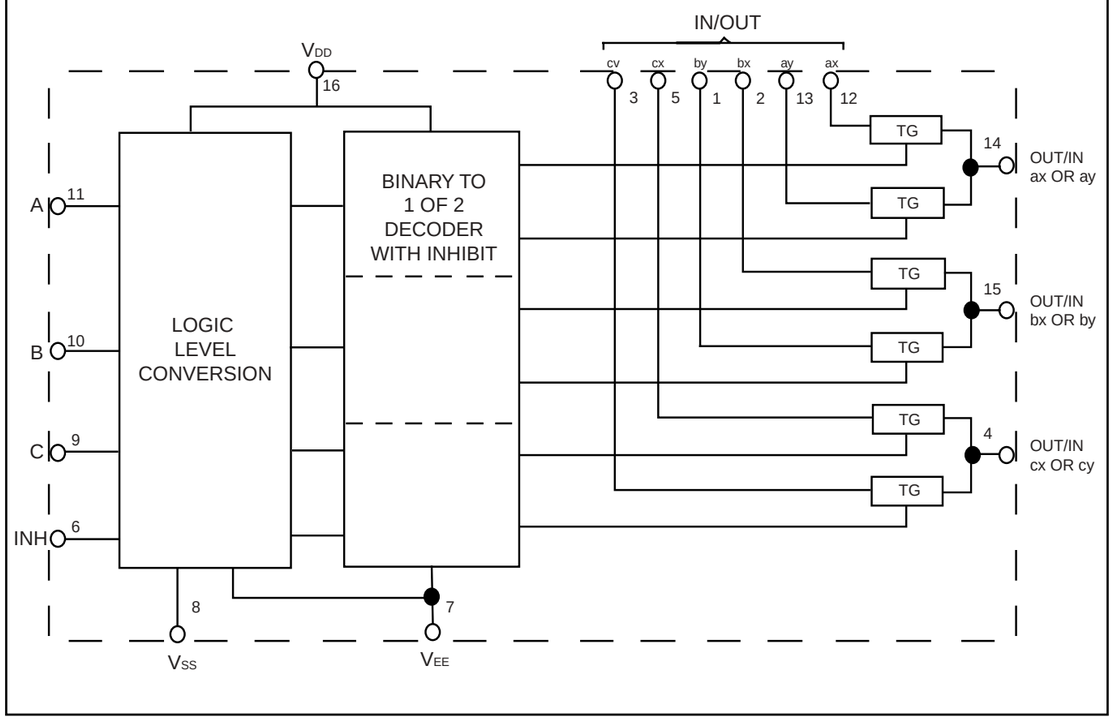

SURROUND DIAGRAM

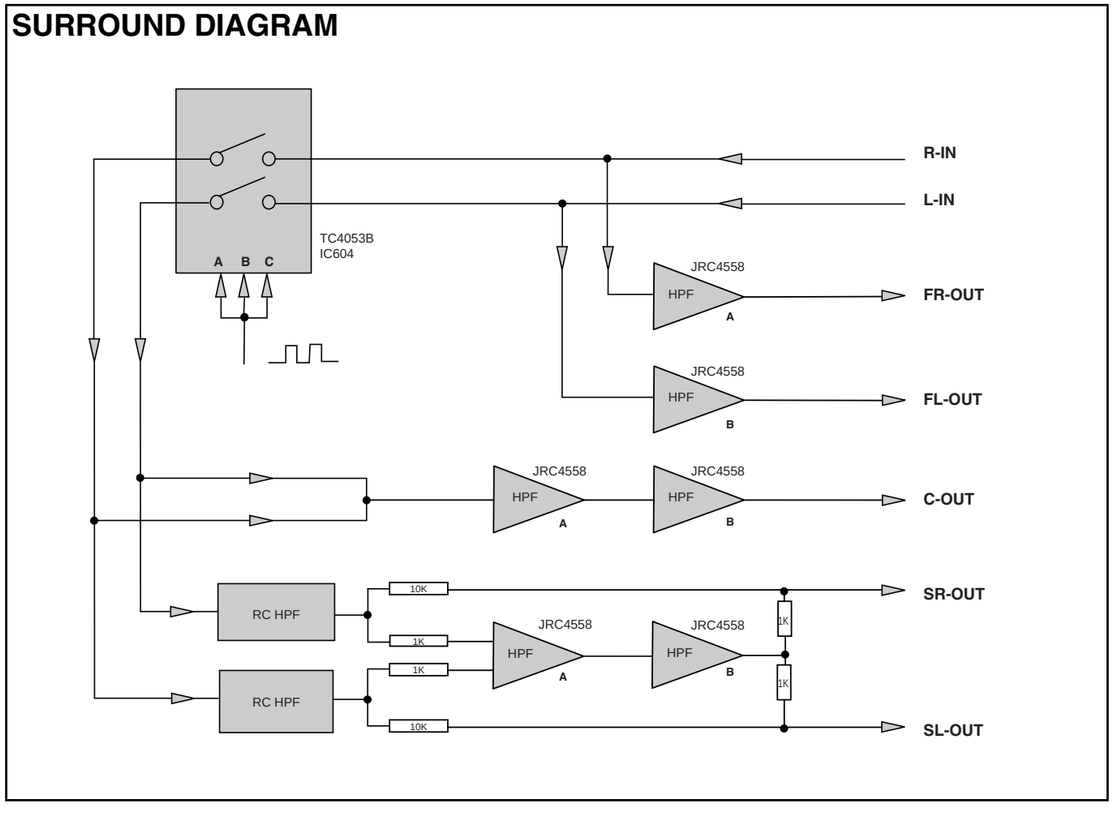

11-2

CIRCUIT DIAGRAM - SURROUND BOARD

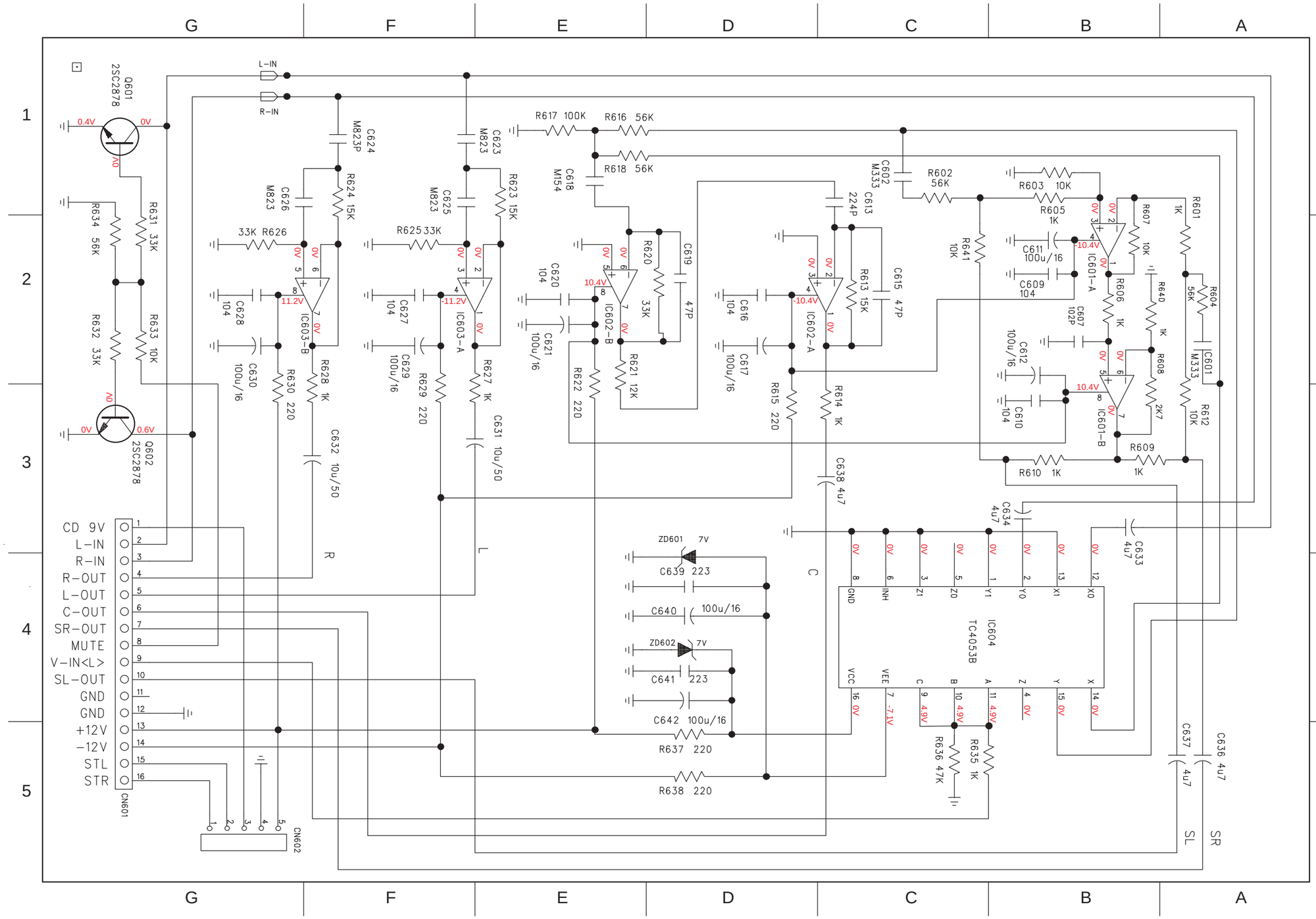

C601	A2	R601	A1
C602	C1	R602	C1
C607	B1	R603	B1
C609	B2	R604	A2
C610	B3	R605	B1
C611	B2	R606	B2
C612	B2	R607	B2
C613	C1	R608	B2
C615	C2	R609	B3
C616	D2	R610	B3
C617	D2	R612	A3
C618	E1	R613	C2
C619	D2	R614	C3
C620	E2	R615	D3
C621	E2	R616	E1
C623	E1	R617	E1
C624	F1	R618	E1
C625	F1	R620	D2
C626	G1	R621	E2
C627	F2	R622	E2
C628	G2	R623	E1
C629	F2	R624	F1
C630	G2	R625	F2
C631	E3	R626	G2
C632	F3	R627	E2
C633	B3	R628	F2
C634	B3	R629	F2
C636	A5	R630	G2
C637	A5	R631	G2
C638	C3	R632	G2
C639	D4	R633	G2
C640	D4	R634	G2
C641	D4	R635	C5
C642	D4	R636	C5
CN601	G5	R637	D5
IC601	B2	R638	D5
IC602	D2	R640	A2
IC603	F2	R641	C2
IC604	B4	ZD601	D3
Q601	G1	ZD602	D4
Q602	G3		

PCB LAYOUT (COMPONENT VIEW)

C601	B2	C615	C4	C624	B6	C632	C6	C641	B1	JW601	C1	JW610	C4	JW618	A6	R613	C5	R629	B6	R638	A1
C602	C2	C616	C5	C625	C6	C633	B2	C642	C1	JW602	C2	JW611	C4	Q601	D2	R614	C5	R630	A6	R641	C2
C607	A4	C617	C5	C626	A6	C634	C1	CN601	D5	JW603	D3	JW612	C4	Q602	D1	R615	C5	R631	C1	ZD601	A2
C609	B4	C618	A4	C627	B6	C636	C3	CN602	C6	JW604	C2	JW613	C4	R602	C2	R616	A2	R632	D1	ZD602	C1
C610	A3	C619	A5	C628	A5	C637	C3	IC601	B3	JW605	B3	JW614	C5	R603	C3	R618	A2	R633	C1		
C611	C3	C620	A4	C629	B6	C638	D5	IC602	B4	JW607	C3	JW615	C5	R604	B2	R622	A2	R634	D1		
C612	A3	C621	B4	C630	A5	C639	A1	IC603	B5	JW608	C4	JW616	D6	R605	B2	R623	C6	R635	A1		
C613	B5	C623	C6	C631	D6	C640	A1	IC604	B1	JW609	C4	JW617	C6	R606	B4	R627	C5	R637	B1		

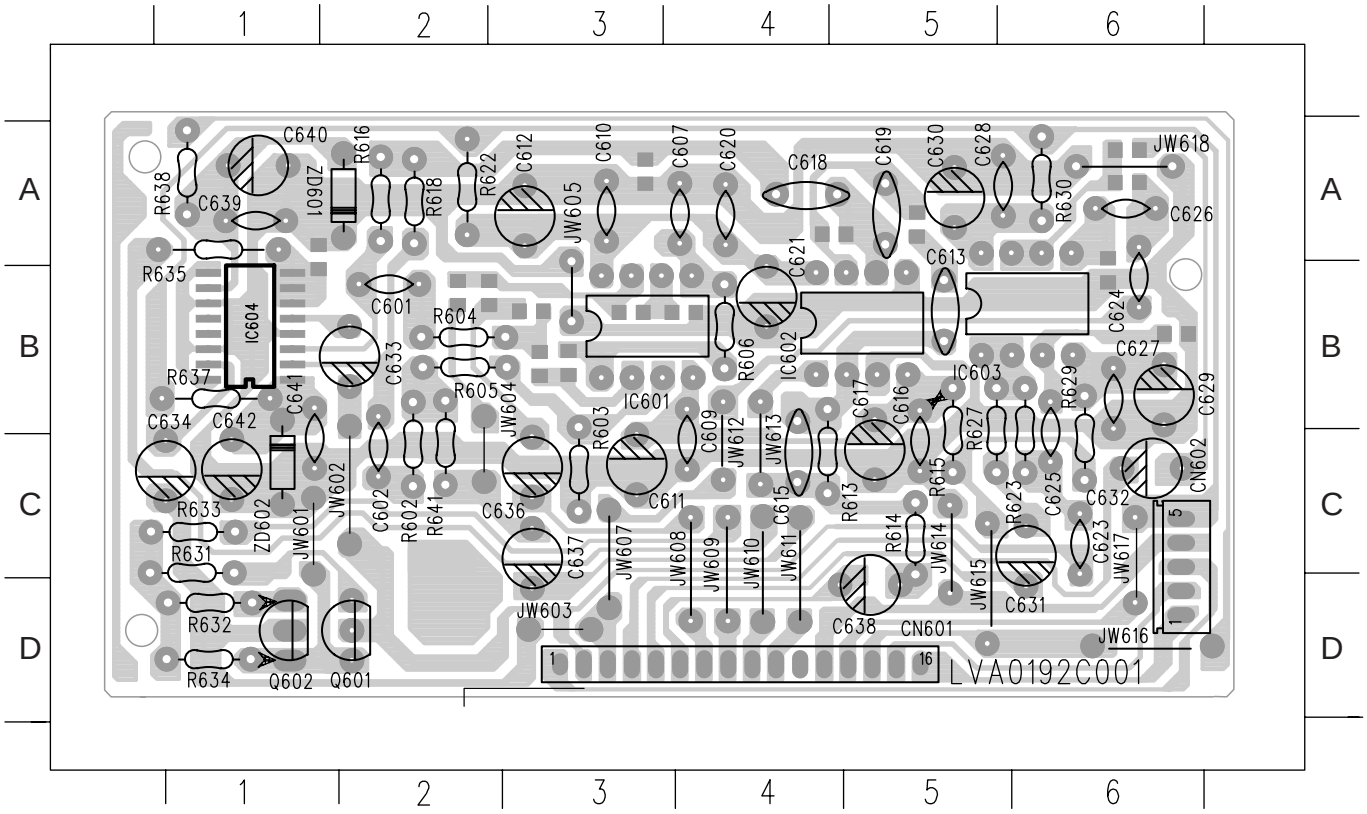

PCB LAYOUT (COPPERSIDE VIEW)

IC604	C6	R607	B4	R609	C5	R612	C4	R620	D3	R624	D1	R626	C1	R628	D1
R601	B4	R608	C4	R610	C5	R617	D4	R621	D1	R625	C1	R636	C6	R640	C3

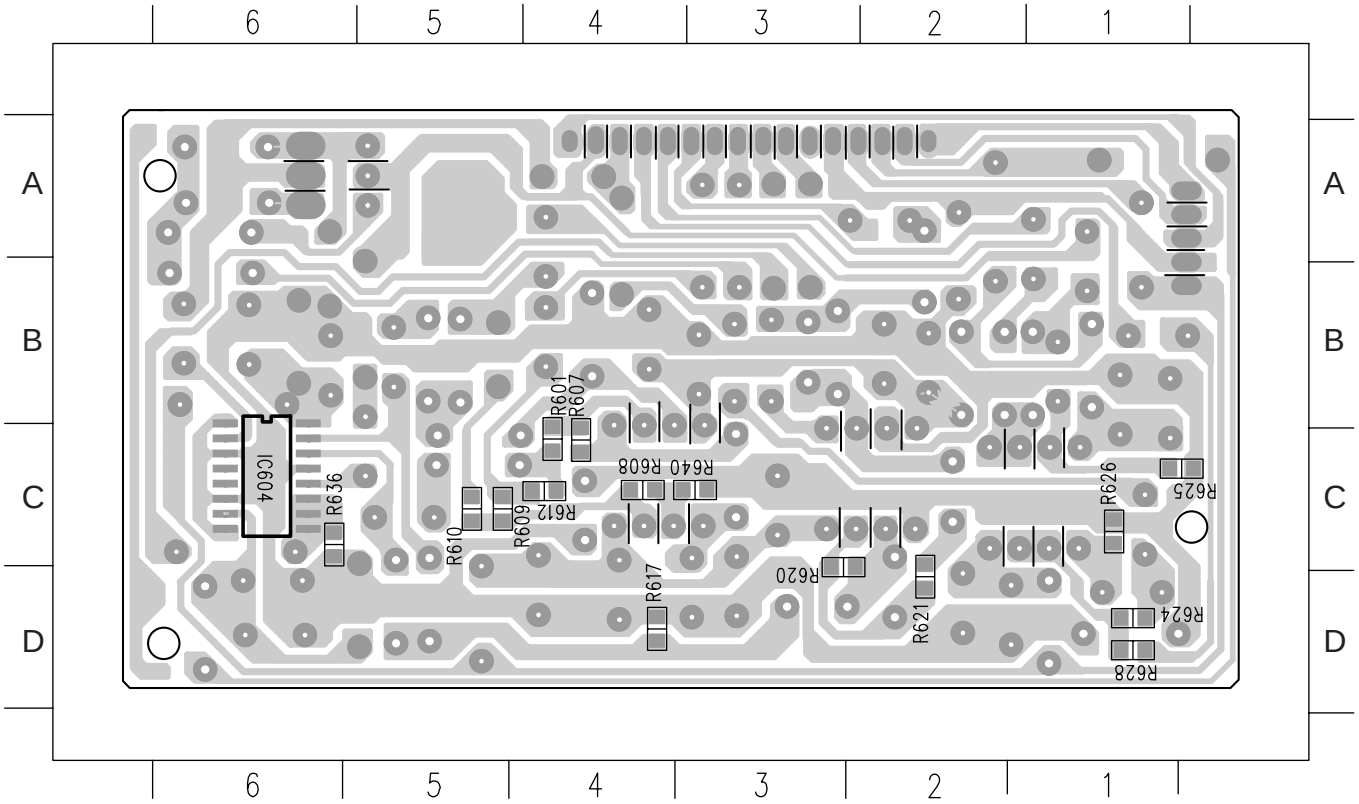

ELECTRICAL PARTS LIST - SURROUND BOARD

CAPACITORS

C601	5322 121 42489	33NF 5% 250V
C602	5322 121 42489	33NF 5% 250V
C607	9965 000 12612	0,001UF 50V +80/-20%
C609	2038 554 00065	100NF +80/-20% 50V
C610	2038 554 00065	100NF +80/-20% 50V
C611	9965 000 12559	100UF 16V 20%
C612	9965 000 12559	100UF 16V 20%
C613	9965 000 12613	0,22UF 50V +80/-20%
C615	9965 000 12614	47PF 50V 5%
C616	2038 554 00065	100NF +80/-20% 50V
C617	9965 000 12559	100UF 16V 20%
C618	9965 000 12615	0,15UF 100V 5%
C619	9965 000 12614	47PF 50V 5%
C620	2038 554 00065	100NF +80/-20% 50V
C621	9965 000 12559	100UF 16V 20%
C623	9965 000 12616	0,082UF 100V 5%
C624	9965 000 12616	0,082UF 100V 5%
C625	9965 000 12616	0,082UF 100V 5%
C626	9965 000 12616	0,082UF 100V 5%
C627	2038 554 00065	100NF +80/-20% 50V
C628	2038 554 00065	100NF +80/-20% 50V
C629	9965 000 12559	100UF 16V 20%
C630	9965 000 12559	100UF 16V 20%
C631	4822 124 40248	10UF 20% 63V
C632	4822 124 40248	10UF 20% 63V
C633	9965 000 12522	4,7UF 50V 20%
C634	9965 000 12522	4,7UF 50V 20%
C636	9965 000 12522	4,7UF 50V 20%
C637	9965 000 12522	4,7UF 50V 20%
C638	9965 000 12522	4,7UF 50V 20%
C639	4822 122 30103	22NF 80% 63V
C640	9965 000 12559	100UF 16V 20%
C641	4822 122 30103	22NF 80% 63V
C642	9965 000 12559	100UF 16V 20%

RESISTORS

R601	4822 051 20102	1K 5% 0,1W
R602	9965 000 12560	56K 1/6W 5%
R603	4822 050 21003	10K 1% 0,6W
R604	9965 000 12560	56K 1/6W 5%
R605	9965 000 12519	1K 1/6W 5%
R606	9965 000 12519	1K 1/6W 5%
R607	9965 000 12484	10K 1/10W 5%
R608	4822 117 12955	2K7 1% 0,1W
R609	4822 051 20102	1K 5% 0,1W
R610	4822 051 20102	1K 5% 0,1W
R612	9965 000 12484	10K 1/10W 5%
R613	4822 050 21503	15K 1% 0,6W
R615	9965 000 12549	220R 1/6W 5%
R616	9965 000 12560	56K 1/6W 5%
R617	4822 117 10837	100K 1% 0,1W
R618	9965 000 12560	56K 1/6W 5%
R620	4822 051 20333	33K 5% 0,1W
R621	9965 000 12884	12K 1% 1/10W
R622	9965 000 12549	220R 1/6W 5%
R623	4822 050 21503	15K 1% 0,6W
R624	4822 116 83933	15K 1% 0,1W
R625	4822 051 20333	33K 5% 0,1W
R626	4822 051 20333	33K 5% 0,1W
R627	9965 000 12519	1K 1/6W 5%
R628	4822 051 20102	1K 5% 0,1W
R629	9965 000 12549	220R 1/6W 5%
R630	9965 000 12549	220R 1/6W 5%
R631	4822 050 23303	33K 1% 0,6W
R632	4822 050 23303	33K 1% 0,6W
R633	4822 050 21003	10K 1% 0,6W
R634	9965 000 12560	56K 1/6W 5%
R635	9965 000 12519	1K 1/6W 5%
R636	9965 000 13180	47K 1/10W 5%
R637	9965 000 12549	220R 1/6W 5%
R638	9965 000 12549	220R 1/6W 5%
R640	4822 051 20102	1K 5% 0,1W
R641	4822 050 21003	10K 1% 0,6W

DIODES

ZD601	4822 130 80272	MTZJ7,5C
ZD602	4822 130 80272	MTZJ7,5C

TRANSISTORS & INTEGRATED CIRCUITS

IC601	4822 209 83631	NJM4558DD
IC602	4822 209 83631	NJM4558DD
IC603	4822 209 83631	NJM4558DD
IC604	9965 000 12492	TC4053BFN
Q601	4822 130 41198	2SC945P
Q602	4822 130 41198	2SC945P

Note: Only the parts mentioned in this list are normal service spare parts.

POWER BOARD

TABLE OF CONTENTS

Circuit Diagram 12-2
PCB Layout 12-3
Electrical Parts List 12-4

CIRCUIT DIAGRAM - POWER BOARD

C982	C2	C989	D4	CN901	C1	D982	D1	IC982	D5	R982	A3	RL981	B3
C987	D2	C990	D5	CN902	B3	D984	C4	Q981	C5	R983	C6	T901	A5
C988	D3	CN203	C6	D981	C3	F981	C3	R981	C4	R985	D4	T902	D3

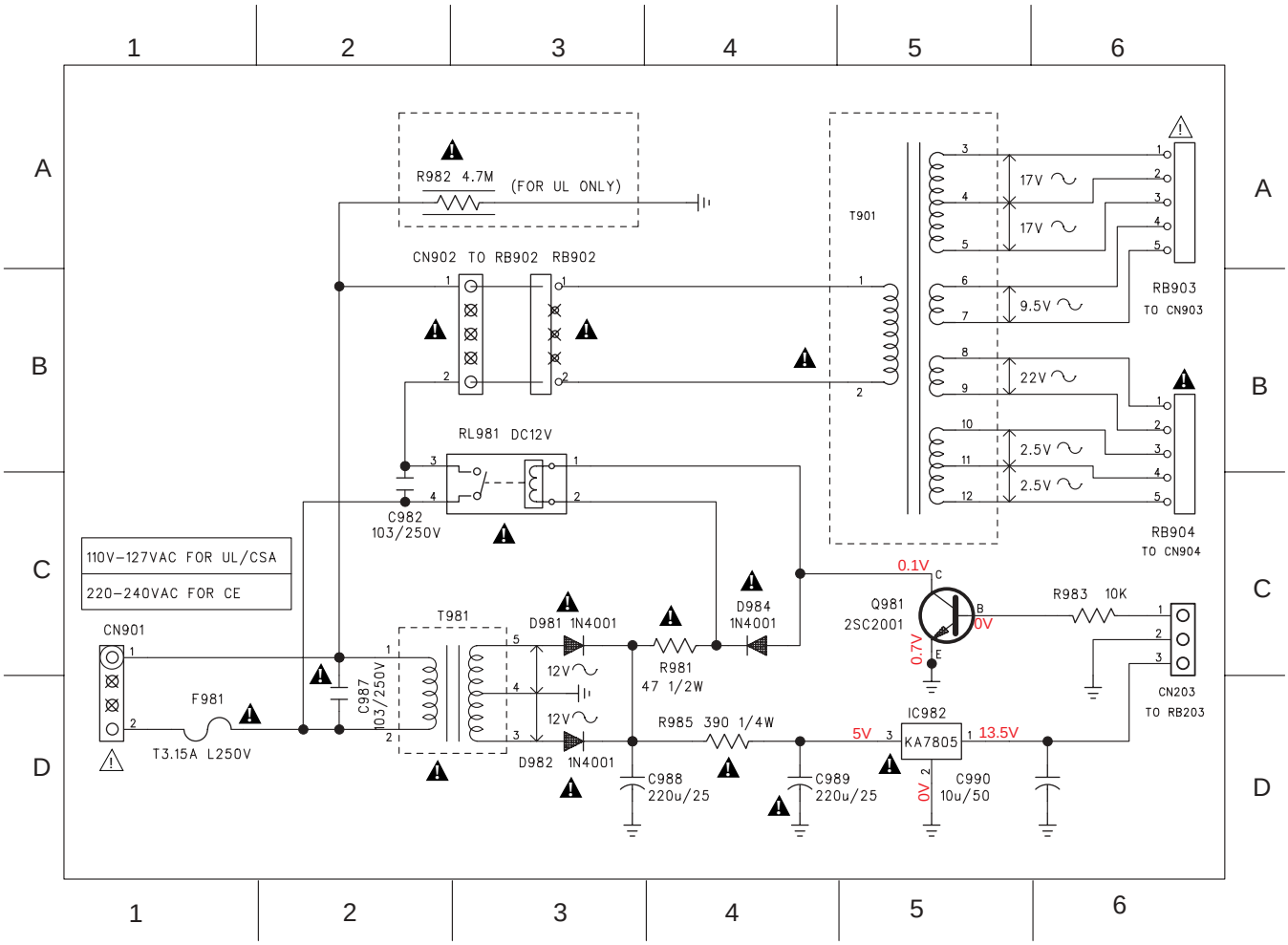

PCB LAYOUT - POWER BOARD

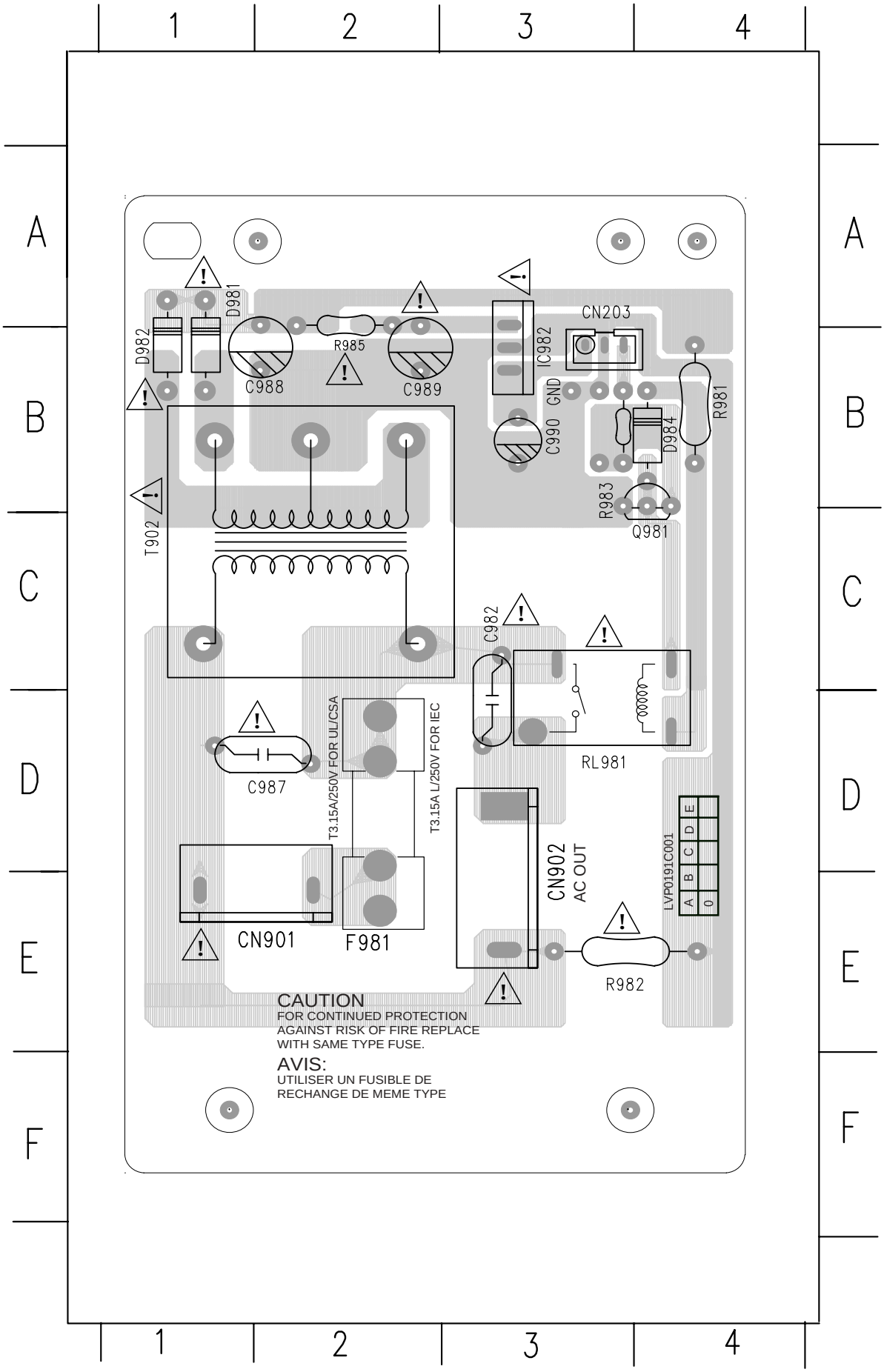

C982	C3
C987	D2
C988	B2
C989	B2
C990	B3
CN203	B3
CN901	E2
CN902	E3
D981	B1
D982	B1
D984	B4
F981	E2
IC982	B3
Q981	C4
R981	B4
R982	E3
R983	B3
R985	B2
RL981	D3
T902	C1

ELECTRICAL PARTS LIST - POWER BOARD

MISCELLANEOUS

CN901	9965 000 12636	⚠	CONNECTOR 4 PIN P=3,96MM	
CN902	9965 000 12601	⚠	CONNECTOR 5PIN P=3,96MM	
F981	4822 070 33152	⚠	FUSE T3,15A 250V SLOW	
RL981	9965 000 09708	⚠	RELAY GJ-SH-112DM 320	
T902	9965 000 12602	⚠	TRANSFORMER 120V 60HZ	/37/37S
T902	9965 000 15975	⚠	TRANSFORMER 230V 50HZ	/21H/30S

RESISTORS

R981	4822 116 52195	⚠	47R 5% 0,5W	
R982	9965 000 12606	⚠	4,7M 1/2W 10%	
R983	4822 050 21003		10K 1% 0,6W	
R985	4822 050 13901	⚠	390R 1% 0,4W	

CAPACITORS

C982	9965 000 15941	⚠	0,01UF 20% 250V	/21H/30S
C982	9965 000 15974	⚠	0,01UF 20% 250V	/37/37S
C987	9965 000 15941	⚠	0,01UF 20% 250V	/21H/30S
C987	9965 000 15974	⚠	0,01UF 20% 250V	/37/37S
C988	9965 000 12605	⚠	220UF 35V 20%	
C989	9965 000 12605	⚠	220UF 35V 20%	
C990	4822 124 40248		10UF 20% 63V	

DIODES

D981	4822 130 31438	⚠	1N4001G
D982	4822 130 31438	⚠	1N4001G
D984	4822 130 31438		1N4001G

TRANSISTORS & INTEGRATED CIRCUITS

IC982	5322 209 81331	⚠	MC7805ACT
Q981	4822 130 41651		2SC2001L

Note: Only the parts mentioned in this list are normal service spare parts.

13-1

MECHANICAL EXPLODED VIEW

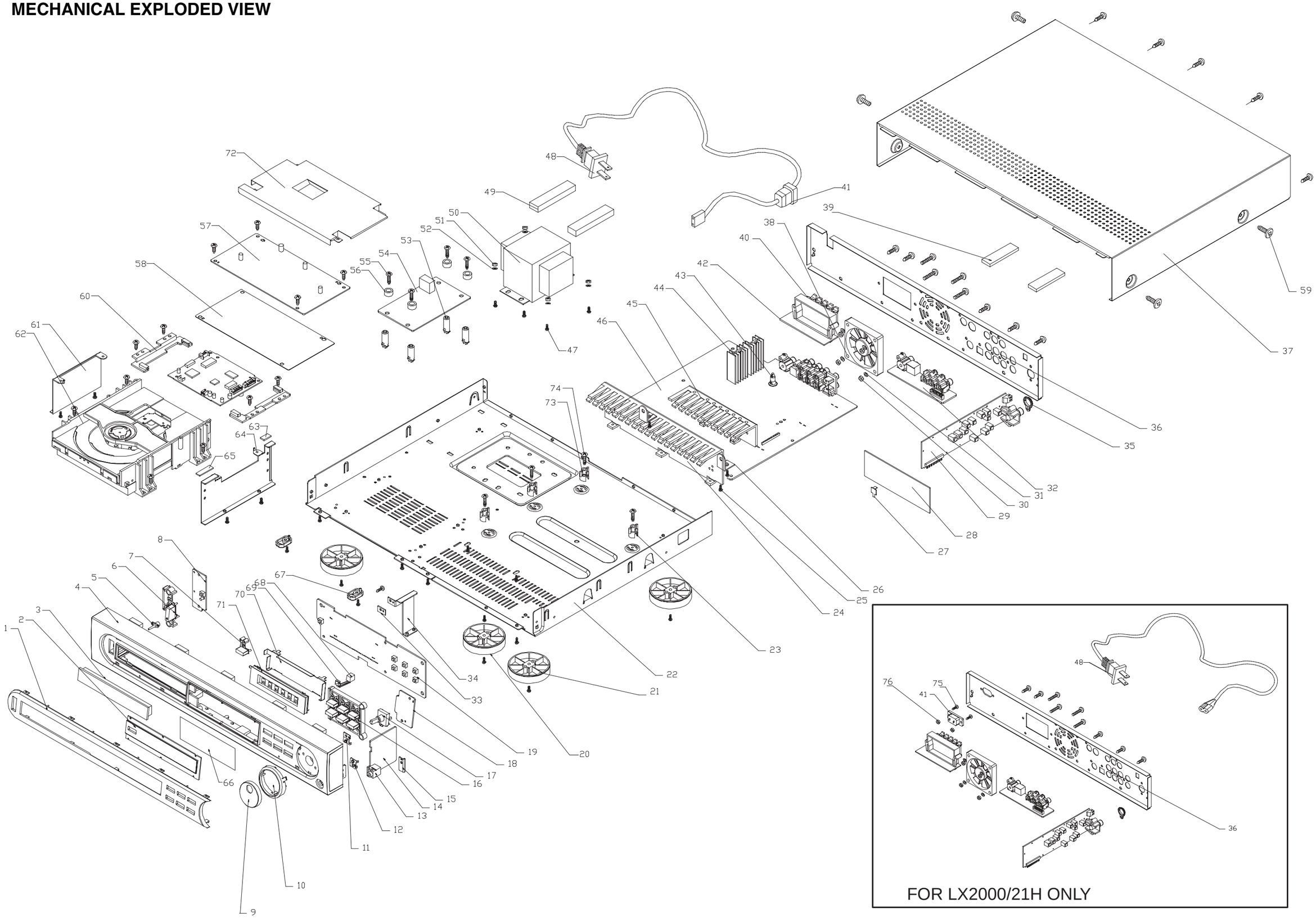

MECHANICAL & ACCESSORIES PARTS LIST - MAIN UINT

1	9965 000 14621	PANEL PLATE	MRD200
1	9965 000 16198	PANEL PLATE	LX2000D
2	9965 000 14622	DISPLAY LENS	
3	9965 000 14623	DVD DOOR	
4	9965 000 15968	FRONT CABINET	/21H/30S
4	9965 000 14671	FRONT CABINET	/37
4	9965 000 14624	FRONT CABINET	/37S
5	9965 000 14625	LED LENS	
6	9965 000 14626	POWER KEY	
7	9965 000 14627	OPEN KEY	
9	9965 000 14628	VOLUME KNOB	
10	9965 000 14629	VOLUME KNOB RING	
16	9965 000 14630	FUNCTION KEYS	
20	9965 000 14110	FOOT, SILVER	
21	9965 000 14111	FOOT, BLACK	
23	9965 000 12437	PCB BRACKET	
35	9965 000 12441	HOLDER	
38	9965 000 12442	FAN	
41	9965 000 12443 ⚠	MAINS SOCKET	/21H
41	9965 000 12817	BUSHING	/30S/37/37S
43	9965 000 12445	SPACER	
48	9965 000 15969 ⚠	MAINS CORD DETACHABLE	/21H
48	9965 000 15976 ⚠	MAINS CORD	/30S
48	9965 000 12818 ⚠	MAINS CORD	/37/37S
50	9965 000 15977 ⚠	MAINS TRANSFORMER 230V	/21H/30S
50	9965 000 14631 ⚠	MAINS TRANSFORMER 120V	/37/37S
53	9965 000 12449	PCB SUPPORT BOTTOM	
62	9965 000 12822	COMPLETE DVD MODULE KIT572SE	
62	9965 000 15489	COMPLETE DVD MODULE KIT772SI	
73	9965 000 12455	PCB BRACKET	
	9965 000 13054	FLEX CABLE 26PIN 5,5CM	
	9965 000 13055	FLEX CABLE 16PIN 5,5CM	
	9965 000 13056	FLEX CABLE 28PIN 15CM	
	9965 000 14633	AM LOOP ANTENNA	
	9965 000 14632	FM ANTENNA	
	9965 000 13060	REMOTE CONTROL PH	/21H/30S
	9965 000 14635	REMOTE CONTROL MGX	/37/37S
	9965 000 15978	INSTRUCTION FOR USE	/21H/30S
	9965 000 14634	INSTRUCTION FOR USE	/37/37S
	9965 000 13092	RGB CABLE 3P 1,5M	
	9965 000 14636	RCA CABLE 1,2M	
	9965 000 14637	RCA CABLE 5,0M	
	9965 000 14672	LS BOXPACKAGE MGX BLACK	
	9965 000 14674	SURR. SPEAKER BOX MGX BLACK	
	9965 000 14675	CENTER SPEAKER BOX MGX BLACK	
	9965 000 11855	KEYHOLE BRACKET BLACK	
	9965 000 14673	FRONT SPEAKER BOX MGX BLACK	
	9965 000 14638	LS BOX PACKAGE MGX SILVER	
	9965 000 14640	SURR. SPEAKER BOX MGX SILVER	
	9965 000 14641	CENTER SPEAKER BOX MGX SILVER	
	9965 000 11844	KEYHOLE BRACKET SILVER	
	9965 000 14639	FRONT SPEAKER BOX MGX SILVER	
	9965 000 16199	LS BOX PACKAGE PHILIPS SILVER	
	9965 000 16143	SURR. SPEAKER BOX PHILIPS SILVER	
	9965 000 16144	CENTR SPEAKER BOX PHILIPS SILVER	
	9965 000 11844	KEYHOLE BRACKET SILVER	
	9965 000 16142	FRONT SPEAKER BOX PHILIPS SILVER	

Note: Only the parts mentioned in this list are normal service spare parts.

13-2

SCREW LIST - MAIN UINT

25	D3 x 8
47	M4 x 12
55	D3 x 22
59	M3 x 6
74	M3 x 16
75	M3 x 8

DOCUMENT HISTORY

Version 1.0

* Initial release

Version 1.1

* New type/version LX2000D/21H/30S has been added
* Correction of Service Manual pages

Page 2-1 :	Correction of Regioon codes and addition of Step 8 Upgrading of software.
Page 5-4 :	Correction of part code & description for C351
Page 6-6 :	Correction of part code for C142, TC002 and CF101; delete R113 & R008 for /37/37S
Page 7-1 :	Addition of DVD Module name
Chapter 7A :	Addition of new DVD Module KIT772SI
Page 8-8 :	Correction of part description for C927 and C944
Page 8-2 & 8-9 :	Deletion of extra R4003 2,2K & correction of R4003 value
Page 12-4 :	Correction of part code for C982 and C987 for /37/37S

Version 1.2

* Modifications on the Service Manual pages

Page 7-2 - 7-6 :	Improved circuit & layout diagrams with better readability
Page 7A-8 :	Addition of 3 more service parts